BURNER PARTS IDENTIFICATION

E32-100-101-300-02 X400 Std
Exploded Diagram

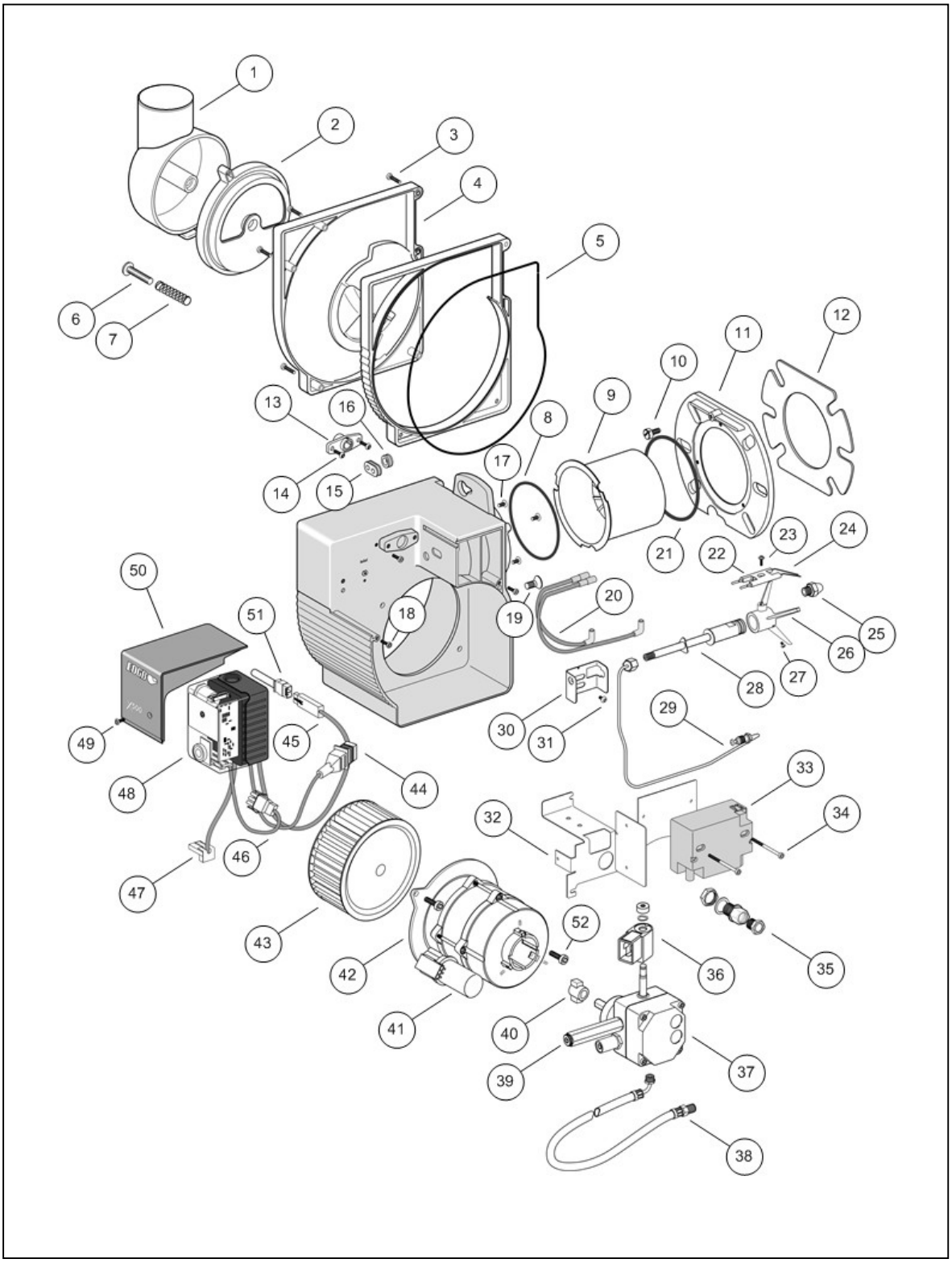

BURNER PARTS IDENTIFICATION

E32-100-101-300-02 X400 Std

Issue 080110

Parts List

1	E80-008-005-001-01	Air Intake Housing	
2	E80-0010	Air Damper (Lo output) + Seal	
3	E80-400-173-120-00	Screw M4x20 Caphead socket	
4	E80-006-005-000-01	Side Cover X400	
5	E80-500-005-120-00	Housing Seal	
6	E80-400-111-325-00	Bolt M6x25	
7	E80-407-100-000-00	Spring	
8	E80-500-008-000-00	Rear Tube Gasket	
9	E80-004-002-004-00	Blast Tube PL10-5-16-8 80mm	
10	X03-SP-01-2-0820	Bolt M8x20 Slotted Pan	
11	E80-001-001-002-00	Mounting Flange	
12	E80-500-001-001-04	Gasket	
13	S01-59101	Photocell flange	
14	E80-400-133-108-00	Screw M4x8	
15	E80-502-100-000-03	HT Lead Grommet	
16	E80-502-200-001-00	Grommet	
17	E80-400-133-212-00	Screw M5x12 Button socket	
18	X03-SP-07-3-0406	Screw M4x6 Cap Socket	
19	E80-400-143-416-00	Screw M8x16 CSK Socket	
20	E80-610-110-330-00	HT Leads	
21	E80-500-006-121-00	Front Tube Seal	
22	E80-200-300-000-01	Electrode Block	
23	X03-SP-01-1-0512	Screw M5 x 12 Pan Pozi	
25	D01-030H8310	0.55 x 80 EH Nozzle	
26	E80-002-011-000-02	Electrode Holder	
27	X03-SP-07-3-0406	Screw M4x6 Cap Socket	
28	E80-300-802-104-00	Inner Oil Pipe	
29	E80-300-800-020-02	Outer Oil Pipe	

30	E80-002-017-000-03	Inner Assembly Bracket	
31	X03-SP-07-3-0406	Screw M4x6 Cap Socket	
32	E80-002-008-000-08	Controls Chassis	
33	D01-052F4031	EBI Ignition Transformer	
34	E80-400-173-240-00	Screw M5x40	
35	X01-0048	Cable Gland	
36	D01-071N0061	Solenoid coil	
37	D01-071N4141-110	BFP11L3 Oil Pump	
38	F01-500-A-1/4M-1/4F	Flexible Oil Line 500mm	
39	E80-300-202-204-02	Gauge Manifold	
40	C01-0005	Motor / Pump Coupling	
41	M02-1-90-18	Motor 90W 240v	
42	E80-001-002-001-00	Motor Flange	
43	E80-202-331-100-00	Fan 120x52mm	
44	D01-071G0202	Oil Solenoid Valve Lead	
45	S01-FZ711S-030	Photocell Lead	
47	D01-052F0132	Ignition Transformer Lead	
48	S01-TF830.3	TF830.3 Control box	
	S01-S98	S98 Wiring Base	
49	X03-SP-07-3-0410	Screw M4x10 Cap Socket	
50	E80-006-006-000-01	Cover X400	
51	S01-MZ770S -2	MZ770S Photocell	