BT 120 – 2 Stage

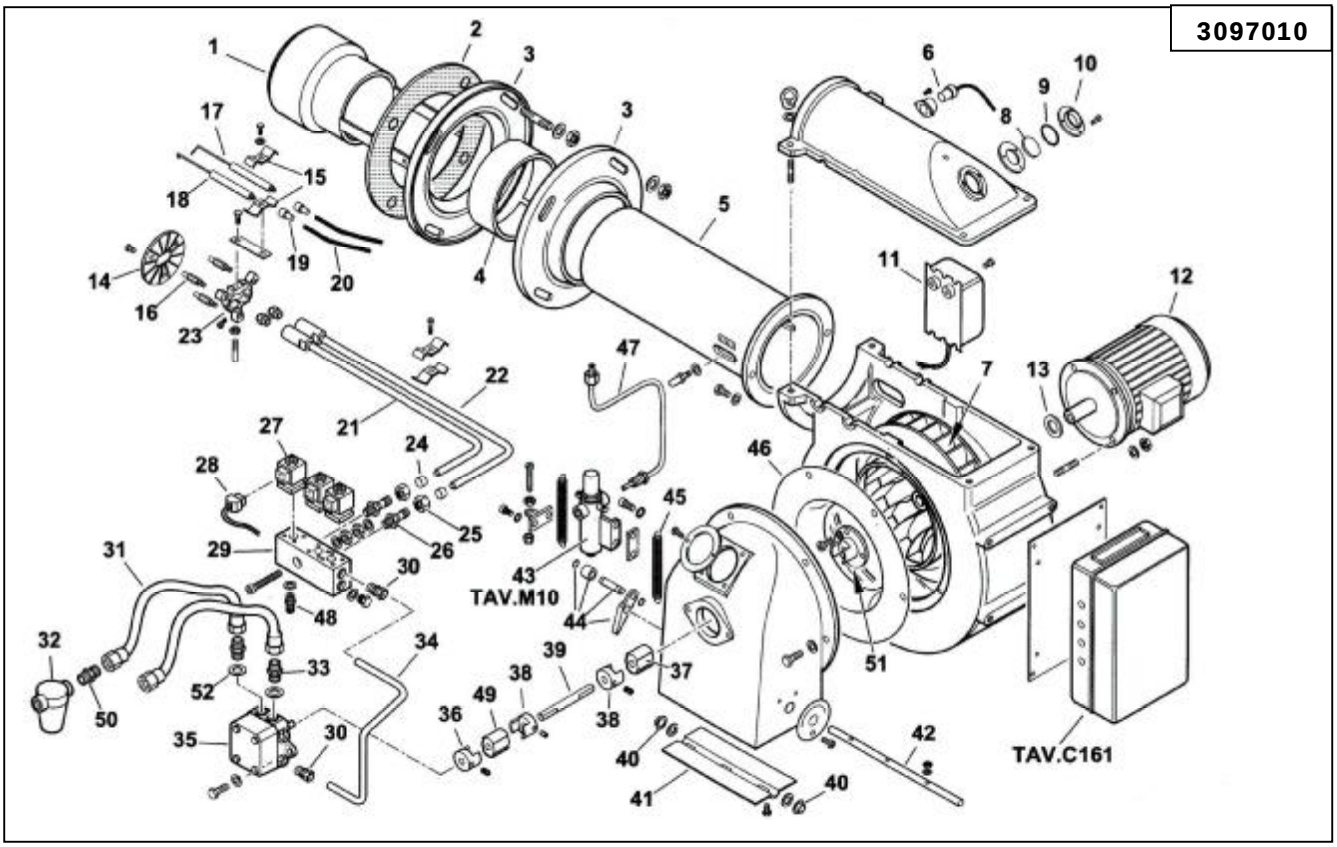

Key	Part No	Description		Key	Part No	Description
1	B07-41616	End Cone		31	B07-28074	Flexible Oil Line
2	B07-15853	Gasket		32	B07-30768	Filter
3	B07-15856	Flange			B07-95046	Cartridge
4	B07-15854	Flange Collar			B07-95100	Seal
5	B07-15875	Burner Tube		33	B07-17663	Nipple
6	B07-30864	Photocell		34	B07-0011020041	Oil Pipe
7	B07-37930	Fan		35	B07-R30752	Pump
8	B07-4145	Sight Glass			B07-95374	Seal
9	B07-4146	O-Ring			B07-95021	Filter
10	B07-4143	Sight Glass Holder			B07-95274	Cover Seal
11	B07-15994	Transformer		36	B07-5941	Coupling
12	B07-30103	Motor		37	B07-16933	Coupling Connector
13	B07-35687	Spacer		38	B07-28894	Coupling
14	B07-15965	Brake Plate		39	B07-15944	Coupling Bar
15	B07-27017	Bracket		40	B07-54056	Bush
16	B07-14170	Pillar		41	B07-56081	Air Damper Flap
17	B07-49368	Right Electrode		42	B07-15972	Air Damper Pin
18	B07-49369	Left Electrode		43	B07-14101	Air Adjuster
19	B07-0005060037	Ignition Cable Cap		44	B07-14256	Lever Assembly
20	B07-30223	HT Cable		45	B07-49421	Sping
21	B07-15957	Nozzle Line 2nd Stage		46	B07-15842	Air Inlet Guide
22	B07-15955	Nozzle Line 1st Stage		47	B07-0011020042	Oil Pipe
23	B07-14168	Support		48	B0713778	Nipple
24	B07-23822	Olive		49	B07-16888	Coupling Connector
25	B07-23829	Nut		50	B07-18138	Nipple
26	B07-0010020003	Nipple		51	B07-28991	Fan Hub
27	B07-0005080002	Solenoid Valve		52	B07-4987	Spacer
28	B07-0005130095	Coil Connector				
29	B07-41505	Manifold			**TAV.C161**	**Control Panel**
30	B07-30987	Connector			**TAV.M10**	**Air Adjuster**

Control Panel - BT 120 – 2 Stage

TAV.C161

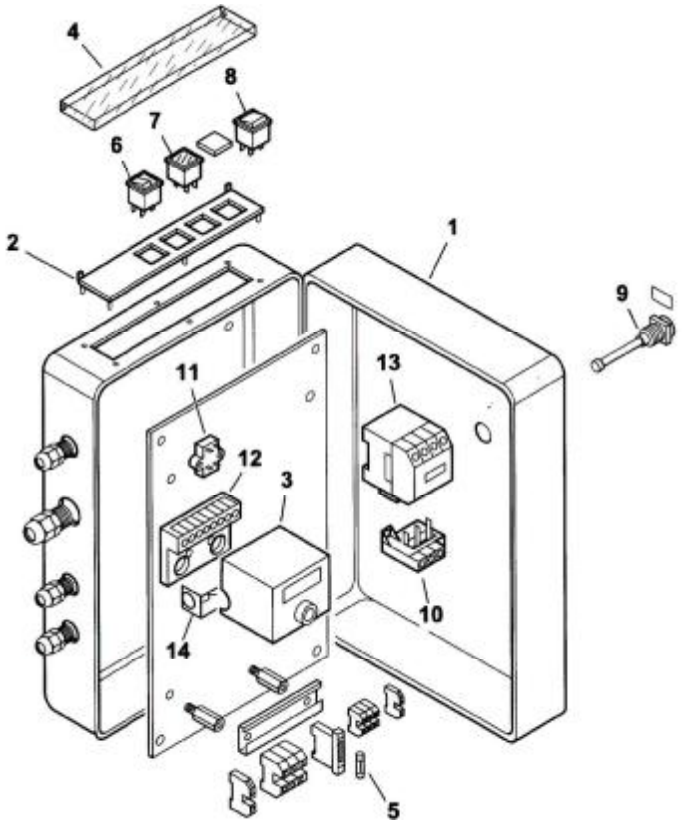

Key	Part No	Description		Key	Part No	Description
1	B07-14280	Box		14	B07-0005030012	
2	B07-0006060006	Switch Panel				
3	B07-31414	Control Box				
4	B07-61228	Cover				
5	B07-7456	Fuse				
6	B07-0005120039	On/Off Switch				
7	B07-0005120053	Lock Out Light				
8	B07-0005120041	Auto/Man – Line Switch				
9	B07-30447	Manual Switch				
10	B07-0005110070	Overload				
11	B07-0005020034	Filter				
12	B07-23527	Wiring Base				
13	B07-0005110051	Contactor				

Air Adjuster – BT 120 – 2 Stage

TAV.M10

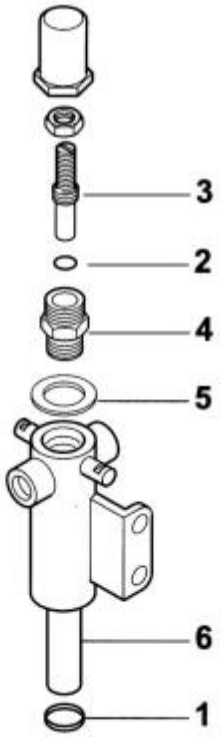

Key	Part No	Description		Key	Part No	Description
1	B07-31376	Seal				
2	B07-30733	Seal				
3	B07-14107	Regulating Screw				
4	B07-49308	Niplle				
5	B07-4983	Spacer				
6	B07-49499	Piston				