BTG 11 – 1 Stage

17066920

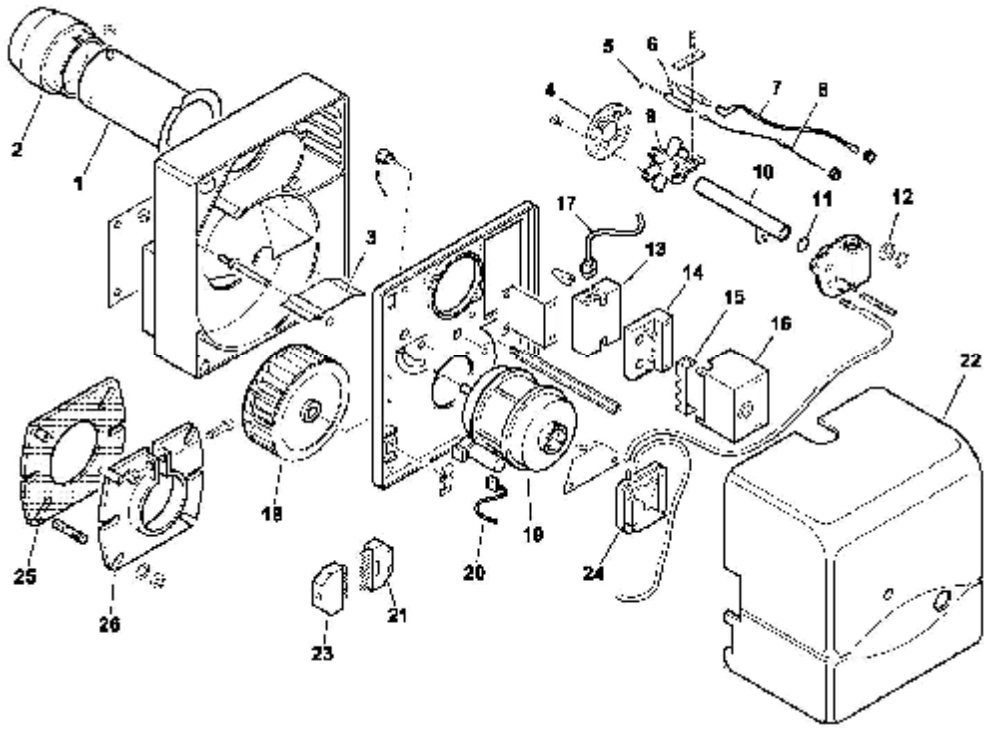

Key	Part No	Description		Key	Part No	Description
1	B07-0013020008	Blast Tube		20	B07-0005130016	Motor Cable Mains
2	B07-0013020037	Burner Extension Tube		21	X01-0001	7 Pin Wieland Socket
3	B07-0013030113	Air Damper Flap		22	B07-0013010100	Rear Cover
4	B07-0013020039	Brake Plate		23	X01-0044	7 Pin Wieland Plug
5	B07-0013020066	Probe		24	D02-LGW-A1	Pressure Switch
6	B07-0013020063	Electrode		25	B07-50413	Gasket for Flange
7	B07-0005140240	HT Cable		26	B07-8013030004	Flange
8	B07-0005140234	Ionisation Cable				
9	B07-0013020038	Gas Head				
10	B07-0013020062	Inner Assembly				
11	B07-30294	O-ring				
12	B07-0013010027	Sight Glass				
13	B07-0005020046	Transformer				
14	L01-AGK11	Control Box Base				
15	B07-0005030012	Cable Entry Plate				
16	L01-LMG25.330B27	Control Box				
17	B07-0005130111	Transformer Cable				
18	B07-0013010004	Fan				
19	M02-1-110-30	Motor				
	M02-0004	Capacitor				