BT 250 – 2 Stage

3130010

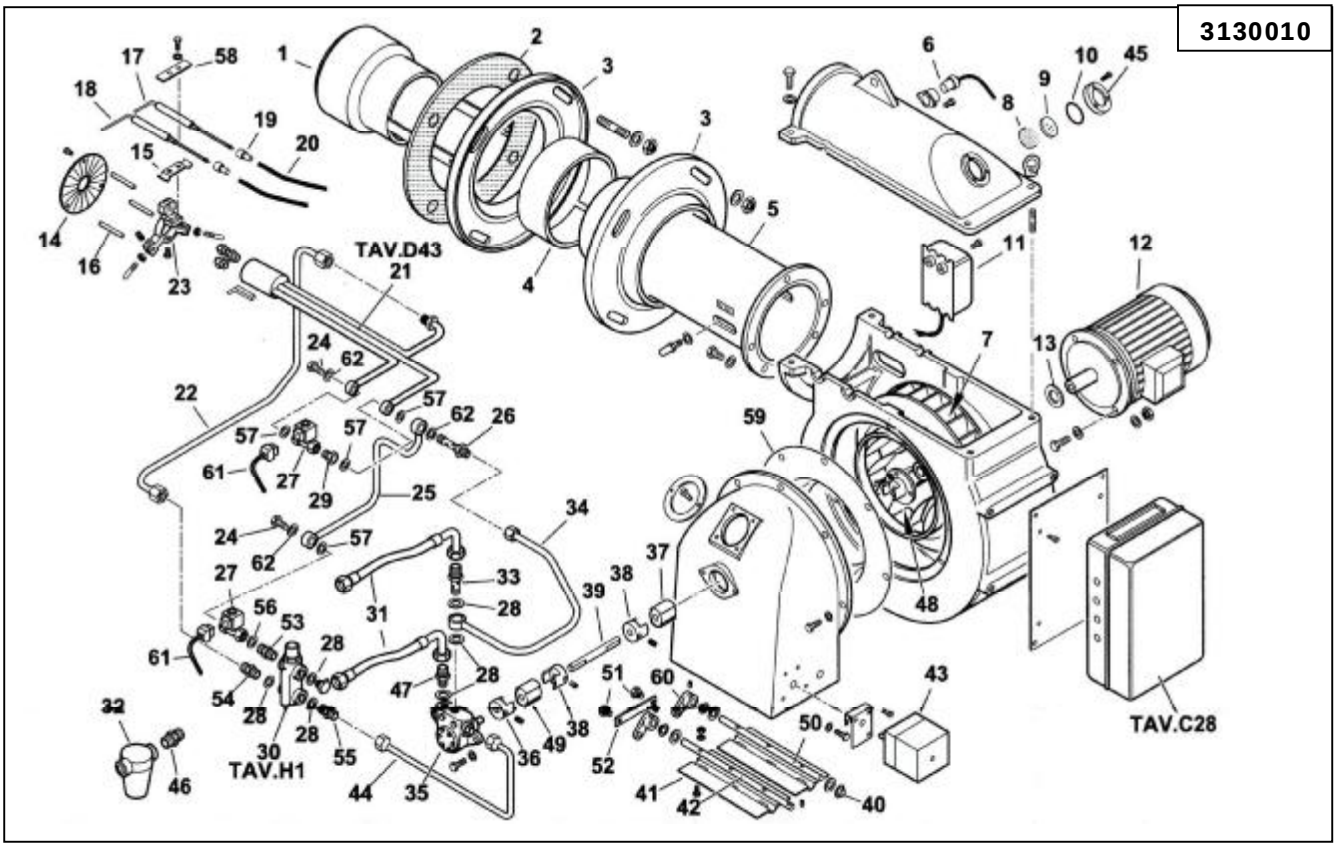

Key	Part No	Description
1	B07-57081	End Cone
2	B07-29185	Gasket
3	B07-29184	Flange
4	B07-29186	Flange Collar
5	B07-57177	Burner Tube
6	B07-30864	Photocell
7	B07-29361	Fan
8	B07-38610	Sight Glass
9	B07-38609	Clear Sight Glass
10	B07-23299	O-Ring
11	B07-57024	Transformer
12	B07-30104	Motor
13	B07-29364	Spacer
14	B07-29165	Brake Plate
15	B07-34459	Bracket
16	B07-37904	Pillar
17	B07-41617	Electrode
18	B07-41617	Electrode
19	B07-0005060037	Ignition Cable Cap
20	B07-30223	HT Cable
21	B07-29354	Nozzle Line Assembly
22	B07-57091	Flow Tube
23	B07-13344	Support
24	B07-13010	Banjo Nut
25	B07-29286	Return Tube
26	B07-29280	Banjo Nipple
27	B07-31168	Solenoid Valve
	B07-95412	Vlave Coil
28	B07-30402	Washer
29	B07-13123	Bush
30	B07-16230	Regulating Valve
31	B07-18058	Flexible Oil Line
32	B07-5460	Filter
33	B07-98185	Banjo Nipple

Key	Part No	Description
34	B07-29285	Return Tube
35	B07-0005060018	Pump
	B07-95519	Seal
36	B07-0006020079	Coupling
37	B07-16933	Coupling Connector
38	B07-28894	Coupling
39	B07-13026	Coupling Bar
40	B07-34314	Bush
41	B07-57029	Air Damper Flap
42	B07-57102	Air Damper Pin
43	B07-31380	Air Damper Motor
44	B07-29287	Flow Tube
45	B07-38611	Sight Glass Holder
46	B07-19415	Nipple
47	B07-441	Nipple
48	B07-29365	Fan Hub
49	B07-16888	Coupling Connector
50	B07-57033	Air Damper Pin
51	B07-35619	Lever Screw
52	B07-29498	Linkage
53	B07-18858	Nipple
54	B07-28854	Nipple
55	B07-29282	Nipple
56	B07-4987	Washer
57	B07-23992	Washer
58	B07-61299	Braket
59	B07-13028	Air Inlet Guard
60	B07-35677	Lever Arm
61	B07-0005130095	Coil Lead
62	B07-29306	Washer
	TAV.C28	**Control Panel**
	TAV.D43	**Nozzle Line Assembly**
	TAV.H1	**Return Control Valve**

Control Panel – BT 250 – 2 Stage

TAV.C28

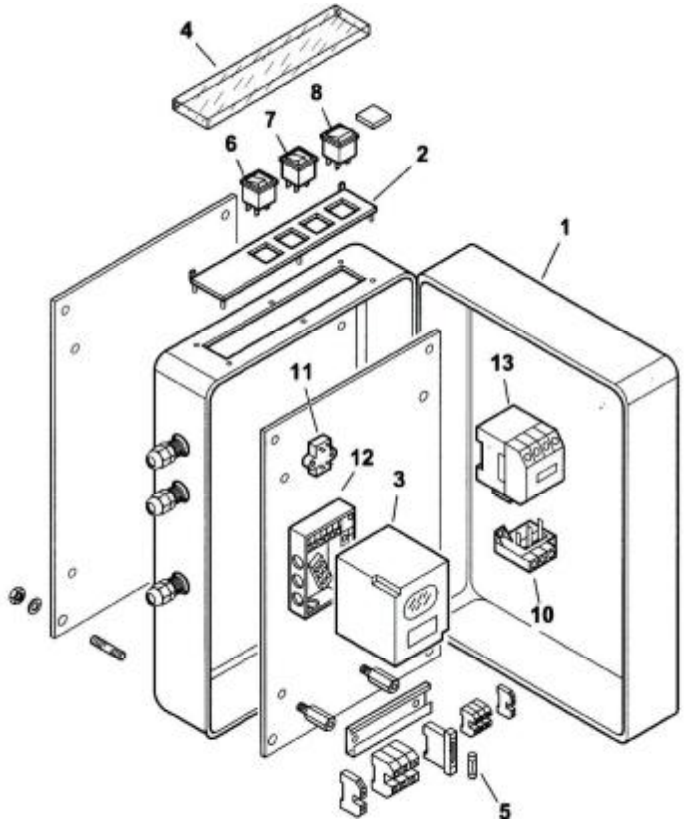

Key	Part No	Description		Key	Part No	Description
1	B07-57332	Box				
2	B07-0006060006	Switch Panel				
3	B07-30865	Control Box				
4	B07-61228	Cover				
5	B07-7456	Fuse				
6	B07-0005120039	On/Off Switch				
7	B07-0005120040	Lock Out Light				
8	B07-0005120041	Auto/Man – Line Switch				
9	B07-0005110074	Overload				
10	B07-0005020034	Filter				
11	B07-25530	Wiring Base				
12	B07-0005110056	Contactor				

Nozzle Line Assembly – BT 250 – 2 Stage

TAV.D43

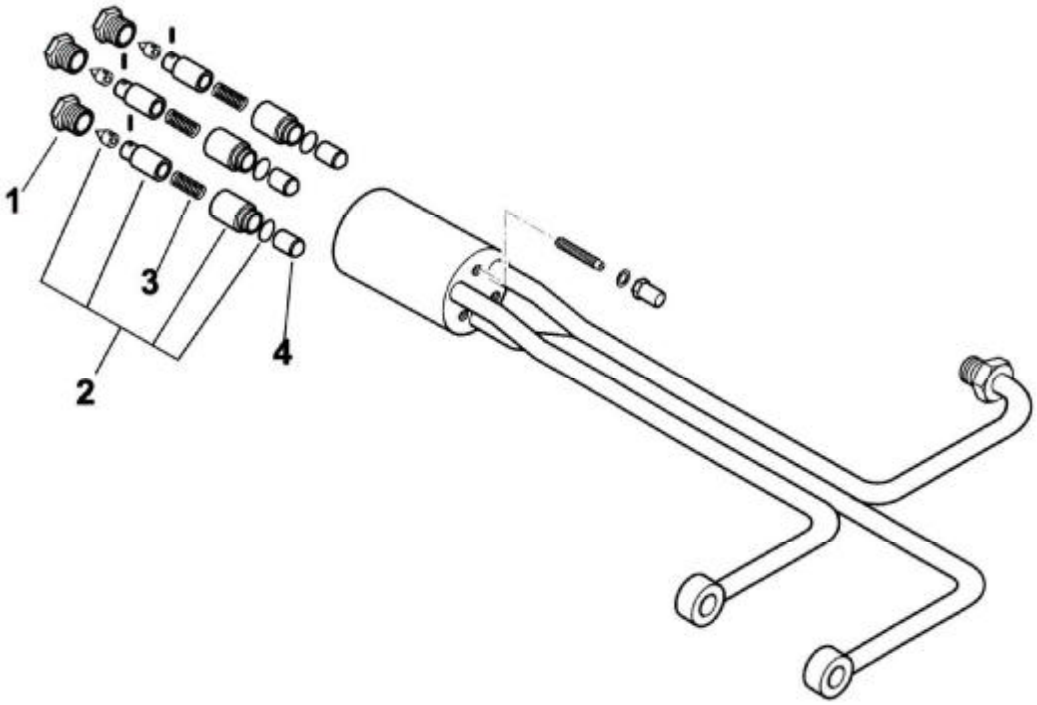

Key	Part No	Description		Key	Part No	Description
1	B07-18095	Bush				
2	B07-95263	Piston Assembly				
3	B07-18093	Spring				
4	B07-18098	Return Piston				

Return Control Valve – BT 250 – 2 Stage

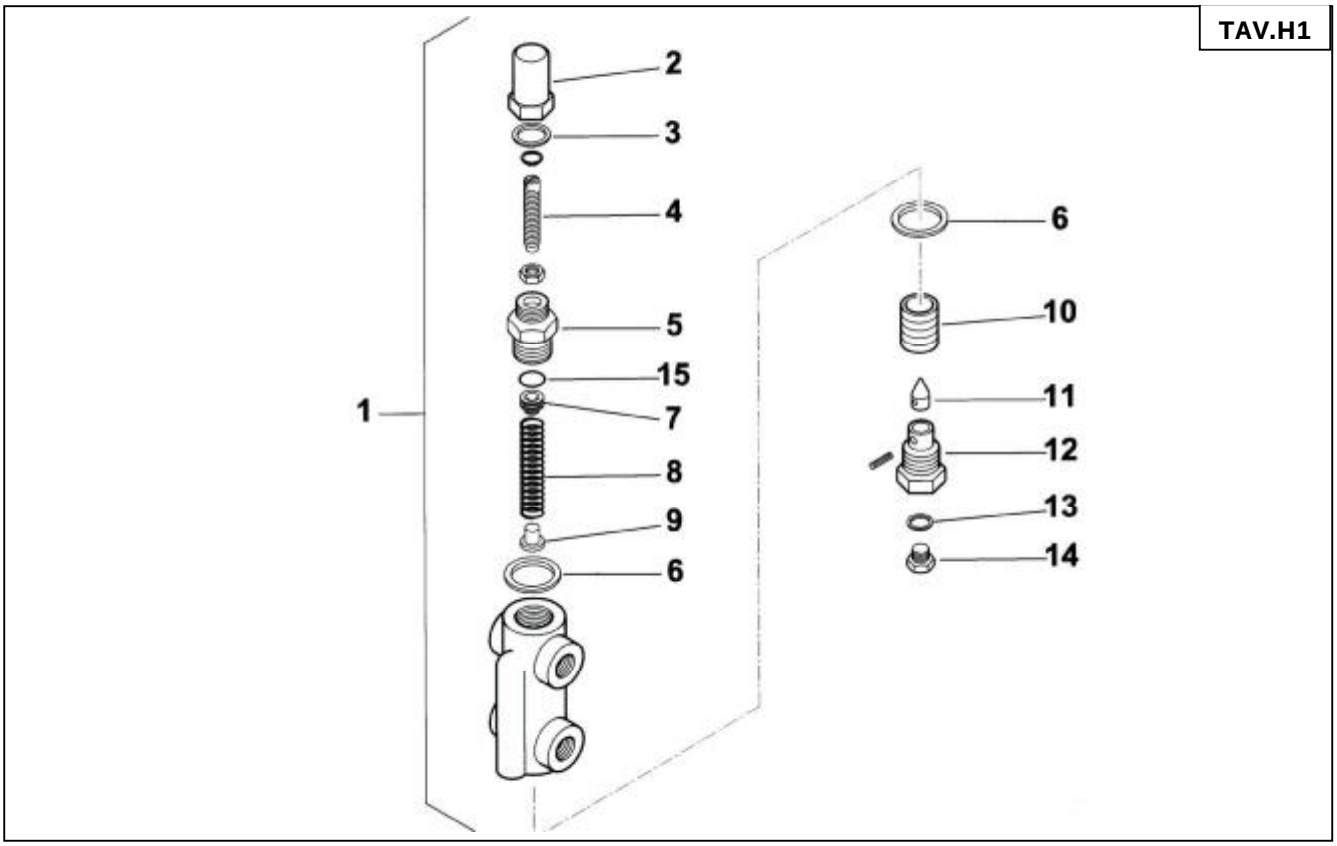

Key	Part No	Description		Key	Part No	Description
1	B07-16325	Valve Assembly		14	B07-15112	Plug
2	B07-16234	Nut		15	B07-23803	Seal
3	B07-30425	Washer				
4	B07-16233	Regulating Screw				
5	B07-16372	Bush				
6	B07-18257	Washer				
7	B07-16373	Spring Cap				
8	B07-3479	Spring				
9	B07-4718	Bush				
10	B07-4717	Piston				
11	B07-18245	Piston Pin				
12	B07-3267	Bush				
13	B07-4987	Washer				