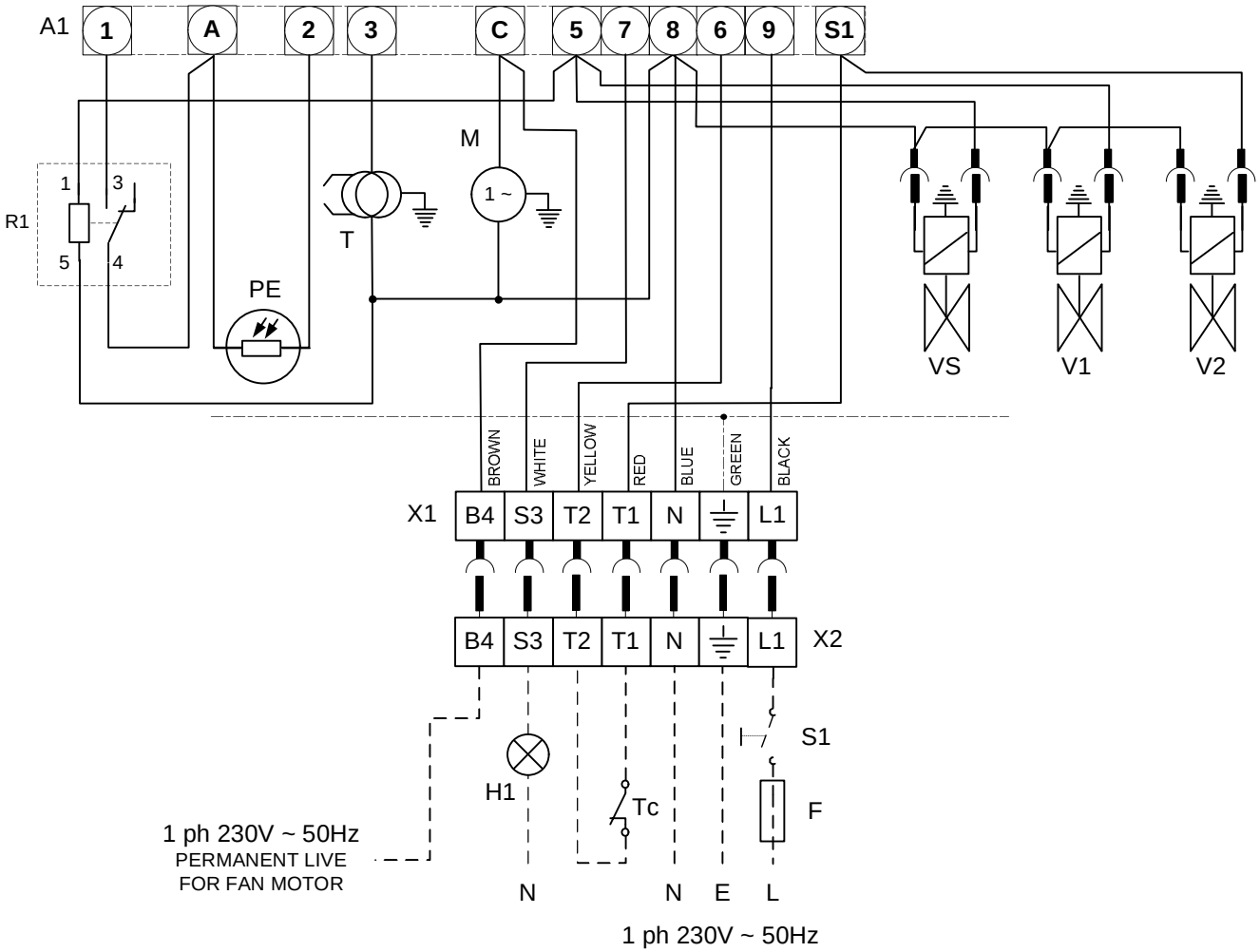

Internal components

A1	-	Satronic TF832 control
PE	-	Photocell
T	-	Transformer
M	-	Motor
VS	-	Safety valve
V1	-	Valve 1st stage
V2	-	Valve 2nd stage
X1	-	7-pin socket
R1	-	Photocell relay

External components

X2	-	7-pin plug
S1	-	Isolating switch
F	-	Fuse
TC	-	Control thermostat
H1	-	Lockout indicator

TITLE X Range Oil Burner
- 7-pin connector
- Low fire start
- Continuous fan

REVISIONS

NO.	DATE	DESCRIPTION
1	23/5/06	SAFETY OIL VALVE ADDED.

DATE ORIGINAL 23/2/06

SCALE —

LATEST REVISION 23/5/06

REVISION No. 1

DRAWING NO. E03-004

DRAWN BAH

EOGB Energy Products Ltd
5 Howard Road, Eaton Socon,
St. Neots, Cambs.
PE1 8ET
9
Telephone: 08703
Facsimile: 0148 9499702