CE

EOGB

- Instruction for ligth oil burner models

BTS 35

Edition 2006/05

INDEX **PAGE**

We hereby declare that our gas, light oil, heavy oil, and combination (gas/light oil or gas/heavy oil) burners are manufactured in conformance with current CE, CEI and UNI standards.

• EOGB guarantees the “CE” certification provided that the burner is coupled to the “CE” gas train supplied by EOGB and the “CE” gas line accessories (on request).

NOTE: this declaration is not valid with regard to EC or U NI Standards for gas burners or the gas part of duel-fuel burners (gas/light oil or gas/heavy oil) when such burners have been ordered in non-compliance with the EC Standard or Italian UN I Standard because they are to be used for special purposes not provided for in the above mentioned standards.

Before using the burner for the first time please carefully read the chapter “WARNINGS NOTES FOR THE USER: HOW TO USE THE BURNER SAFELY” in this instruction manual, which is an integral and essential part of the product. The works on the burner and on the system have to be carried out only by competent people.

- Read carefully the instructions before starting the burner and service it.
- The electric supply must be disconnected before starting working on it.
- If the works are not carried out correctly it is possible to cause dangerous accidents.

WARNING NOTES FOR THE USER
HOW TO USE THE BURNER SAFELY

FOREWORD

These warning notes are aimed at ensuring the safe use of the components of heating systems for civil use and the production of hot water. They indicate how to act to avoid the essential safety of the components being compromised by incorrect or erroneous installation and by improper or unreasonable use. The warning notes provided in this guide also seek to make the consumer more aware of safety problems in general, using necessarily technical but easily understood language. The manufacturer is not liable contractually or extra contractually for any damage caused by errors in installation and in use, or where there has been any failure to follow the manufacturer's instructions.

GENERAL WARNING NOTES

- The instruction booklet is an integral and essential part of the product and must be given to the user. Carefully read the warnings in the booklet as they contain important information regarding safe installation, use and maintenance. Keep the booklet to hand for consultation when needed.
- Equipment must be installed in accordance with current regulations, with the manufacturer's instructions and by qualified technicians. By the term 'qualified technicians' is meant persons that are competent in the field of heating components for civil use and for the production of hot water and, in particular, assistance centres authorised by the manufacturer. Incorrect installation may cause damage or injury to persons, animals or things. The manufacturer will not in such cases be liable.
- After removing all the packaging make sure the contents are complete and intact. If in doubt do not use the equipment and return it to the supplier. The packaging materials (wooden crates, nails, staples, plastic bags, expanded polystyrene, etc.) must not be left within reach of children as they may be dangerous to them. They should also be collected and disposed on in suitably prepared places so that they do no pollute the environment.
- Before carrying out any cleaning or maintenance, switch off the equipment at the mains supply, using the system's switch or shut-off systems.
- If there is any fault or if the equipment is not working properly, de-activate the equipment and do not attempt to repair it or tamper with it directly. In such case get in touch with only qualified technicians. Any product repairs must only be carried out by EOGB authorised assistance centres using only original spare parts. Failure to act as above may jeopardise the safety of the equipment. To ensure the efficiency and correct working of the equipment, it is essential to have periodic maintenance carried out by qualified technicians following the manufacturer's instructions.
- If the equipment is sold or transferred to another owner or if the owner moves and leaves the equipment, make sure that the booklet always goes with the equipment so it can be consulted by the new owner and/or installer.
- For all equipment, with optionals or kits (including electrical), only original accessories must be used.

BURNERS

- This equipment must be used only for its expressly stated use: applied to boilers, hot air boilers, ovens or other similar equipment and not exposed to atmospheric agents. Any other use must be regarded as improper use and hence dangerous.
- The burner must be installed in a suitable room that has ventilation in accordance with current regulations and in any case sufficient to ensure correct combustion
- Do not obstruct or reduce the size of the burner' air intake grills or the ventilation openings for the room where a burner or a boiler is installed or dangerous mixtures of toxic and explosive gases may form.
- Before connecting the burner check that the details on the plate correspond to those of the utility supplies (electricity, gas, light oil or other fuel).
- Do not touch hot parts of the burner. These, normally in the areas near to the flame and any fuel pre-heating system, become hot when the equipment is working and stay hot for some time after the burner has stopped.
- If it is decided not to use the burner any more, the following actions must be performed by qualified technicians:
  a) Switch off the electrical supply by disconnecting the power cable from the master switch.
  b) Cut off the fuel supply using the shut-off valve and remove the control wheels from their position.
  c) Render harmless any potentially dangerous parts.

Special warning notes

- Check that the person who carried out the installation of the burner fixed it securely to the heat generator so that the flame is generated inside the combustion chamber of the generator itself.
- Before starting up the burner, and at least once a year, have qualified technicians perform the following operations:
  a) Set the burner fuel capacity to the power required by the heat generator.
  b) Adjust the combustion air flow to obtain combustion yield of at least the minimum set by current regulations.
  c) Carry out a check on combustion to ensure the production of noxious or polluting un-burnt gases does not exceed limits permitted by current regulations.
  d) Check the adjustment and safety devices are working properly.
  e) Check the efficiency of the combustion products exhaust duct.
  f) Check at the end of the adjustments that all the adjustment devices mechanical securing systems are properly tightened.
  g) Make sure that the use and maintenance manual for the burner is in the boiler room.
- If the burner repeatedly stops in lock-out, do not keep trying to manually reset it, but call a qualified technicians to sort out the problem.
- The running and maintenance of the equipment must only be carried out by qualified technicians, in compliance with current regulations.

WARNING NOTES FOR THE USER
HOW TO USE THE BURNER SAFELY

ELECTRICAL SUPPLY

- The equipment is electrically safe only when it is correctly connected to an efficient ground connection carried out in accordance with current safety regulations. It is necessary to check this essential safety requirement. If in doubt, call for a careful electrical check by a qualified technicians, since the manufacturer will not be liable for any damage caused by a poor ground connection.
- Have qualified technicians check that the wiring is suitable for the maximum power absorption of the equipment, as indicated in the technical plate, making sure in particular that the diameter of cables is sufficient for the equipment's power absorption.
- Adapters, multiple plugs and extension cables may not be used for the equipment's power supply.
- An ominpolar switch in accordance with current safety regulations is required for the mains supply connection.
- The electrical supply to the burner must have neutral to ground connection. If the ionisation current has control with neutral not to ground it is essential to make a connection between terminal 2(neutral) and the ground for the RC circuit.
- The use of any components that use electricity means that certain fundamental rules have to followed, including the following: -

  do not touch the equipment with parts of the body that are wet or damp or with damp feet

  - do not pull on electrical cables

  - do not leave the equipment exposed to atmospheric agents (such as rain or sun etc.) unless there is express provision for this. - do

  not allow the equipment to be used by children or inexpert persons.
- The power supply cable for the equipment not must be replaced by the user. If the cable gets damaged, switch off the equipment, and call only on qualified technicians for its replacement.
- If you decide not to use the equipment for a while it is advisable to switch off the electrical power supply to all components in the system that use electricity (pumps, burner, etc.).

GAS, LIGHT OIL, OR OTHER FUEL SUPPLIES

General warning notes

- Installation of the burner must be carried out by qualified technicians and in compliance with current law and regulations, since incorrect installation may cause damage to person, animals or things, for which damage the manufacturer cannot be held responsible.
- Before installation it is advisable to carry out careful internal cleaning of all tubing for the fuel feed system to remove any residues that could jeopardise the proper working of the burner.
- For first startup of the equipment have qualified technicians carryout the following checks:
- If you decide not to use the burner for a while, close the tap or taps that supply the fuel.

Special warning notes when using gas

- Have qualified technicians check the following:
  a) that the feed line and the train comply with current law and regulations.
  b) that all the gas connections are properly sealed.
- Do not use the gas pipes to ground electrical equipment.
- Do not leave the equipment on when it is not in use and always close the gas tap.
- If the user of is away for some time, close the main gas feed tap to the burner.
- If you smell gas:
  a) do use any electrical switches, the telephone or any other object that could produce a spark;
  b) immediately open doors and windows to create a current of air that will purify the room;
  c) close the gas taps;
  d) ask for the help of qualified technicians.
- Do not block ventilation openings in the room where there is gas equipment or dangerous situations may arise with the build up of toxic and explosive mixtures.

FLUES FOR HIGH EFFICIENCY BOILERS AND SIMILAR

It should be pointed out that high efficiency boilers and similar discharge combustion products (fumes) at relatively low temperatures into the flue. In the above situation, traditional flues (in terms of their diameter and heat insulation) may be suitable because the significant cooling of the combustion products in these permits temperatures to fall even below the condensation point. In a flue that works with condensation there is soot at the point the exhaust reaches the atmosphere when burning light oil or heavy oil or the presence of condensate water along the flue itself when gas is being burnt (methane, LPG, etc.). Flues connected to high efficiency boilers and similar must therefore be of a size (section and heat insulation) for the specific use to avoid such problems as those described above.

TECHNICAL SPECIFICATIONS

		BTS 18	BTS 26	BTS 35
Burner Output	**Max kg/h** **Min kg/h**	**18.0** **9.3**	**26** **13**	**33** **15**
Thermic Capacity	**Max kg/h** **Min kg/h**	**213** **110**	**308** **154**	**391** **178**
Pump Pressure	**bar**		**12**	
Fuel Maximum Viscosity (light oil)			**1.5°E - a/at 20°C**	
Electrical Supply			**1N 230V - 50Hz**	
Motor	**230V-50Hz**	**250 W**	**370 W**	
Transformer			**20 mA – 10kV**	
Absorbed Electrical Power *	**kW**		**0.650**	
Weight	**Kg**	**32**	**32**	**32**

* Total absorption at start with ignition transformer on.

STANDARD ACCESSORIES	BTS 18	BTS 26	BTS 35
Isolating Gasket	N 1	N 1	N 1
Insulating Cord	N 1	N 1	N 1
Stud Bolts	N 4 M10	N 4 M10	N 4 M12
Hexagonal Nuts	N 4 M10	N 4 M10	N 4 M12
Flat Washers	N 4 – Ø10	N 4 – Ø10	N 4 – Ø12
Flexible Pipes	N 21/4” x 3/8” x 1200		
Line Filter	3/8”	3/8”	3/8”

BTS 18 - 26 - BTS 35

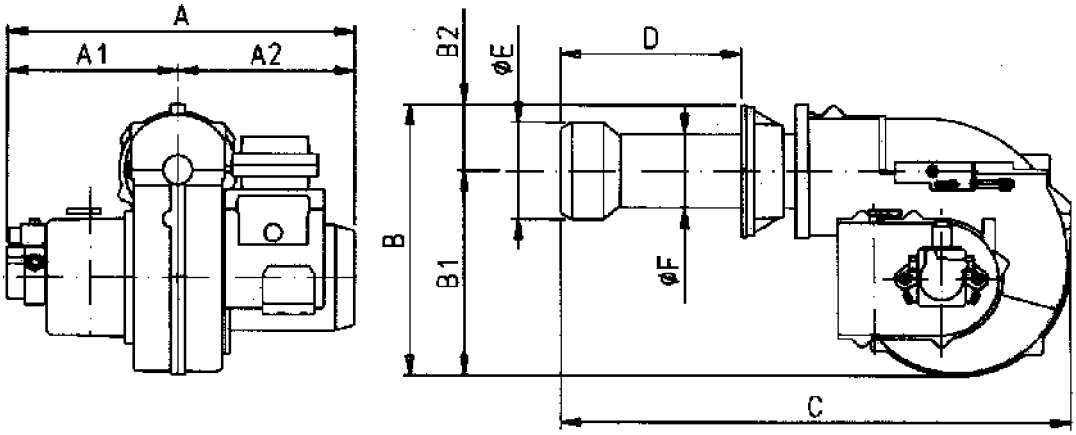

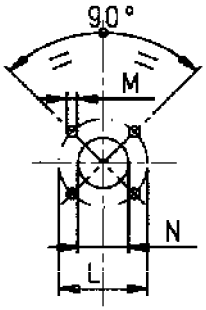

	OVERAL DIMENSIONS														
	A	A1	A2	B	B1	B2	C	D		E	F	L		M	N
								MIN	MAX	Ø	Ø	MIN	MAX		
BTS 18	450	220	230	355	262.5	92.5	710	105	300	117	114	170	210	M10	135
BTS 26	450	220	230	355	262.5	92.5	710	105	300	139	114	170	210	M10	150
BTS 35	450	220	230	373	262.5	110.0	780	105	350	150	135	200	245	M12	165

BTS 18 - BTS 26 - BTS35

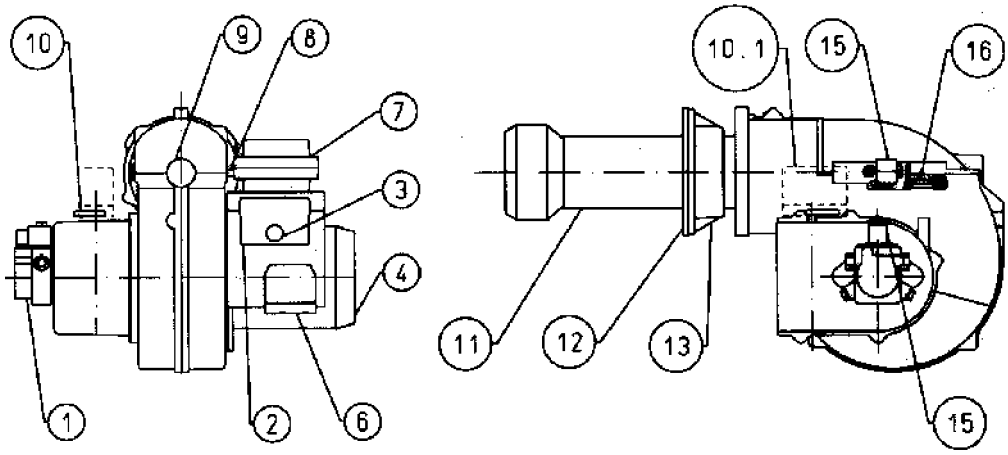

1. Light Oil Pump
2. Control Box
3. Reset Button
4. Fan Motor
5. Manual Switch
6. Connectors
7. Ignition Transformer
8. Photocell
9. Flame Inspection Window
10. Air Gate Regulation
11. Combustion Head
12. Insulating Gasket
13. Burner Mounting Flange
14. Burner Cover
15. Electrovalve
16. Disk Head Regulating Screw

WORKING FIELD

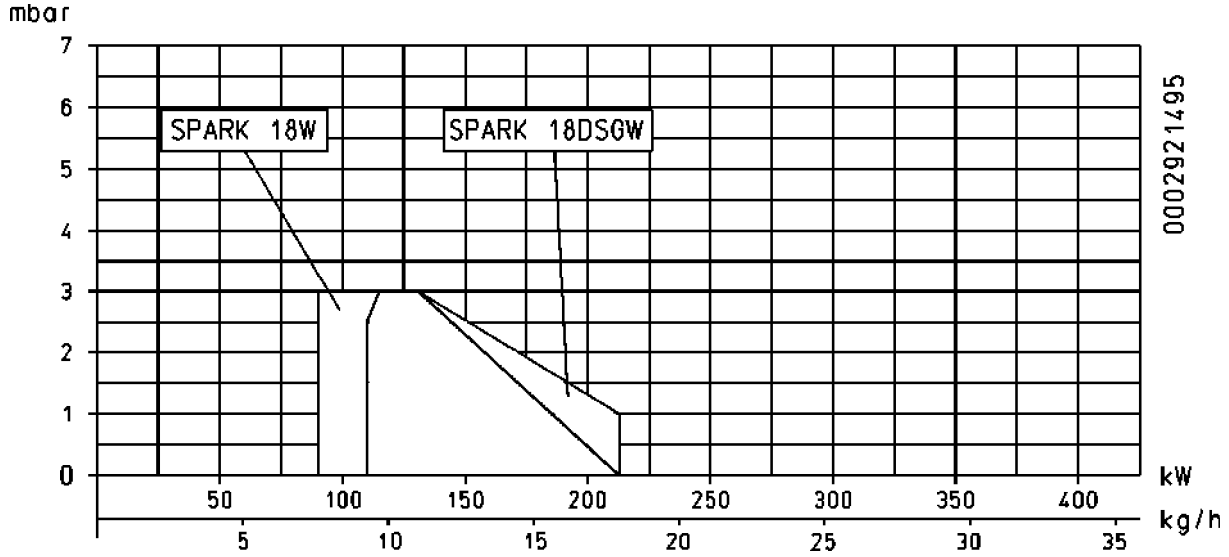

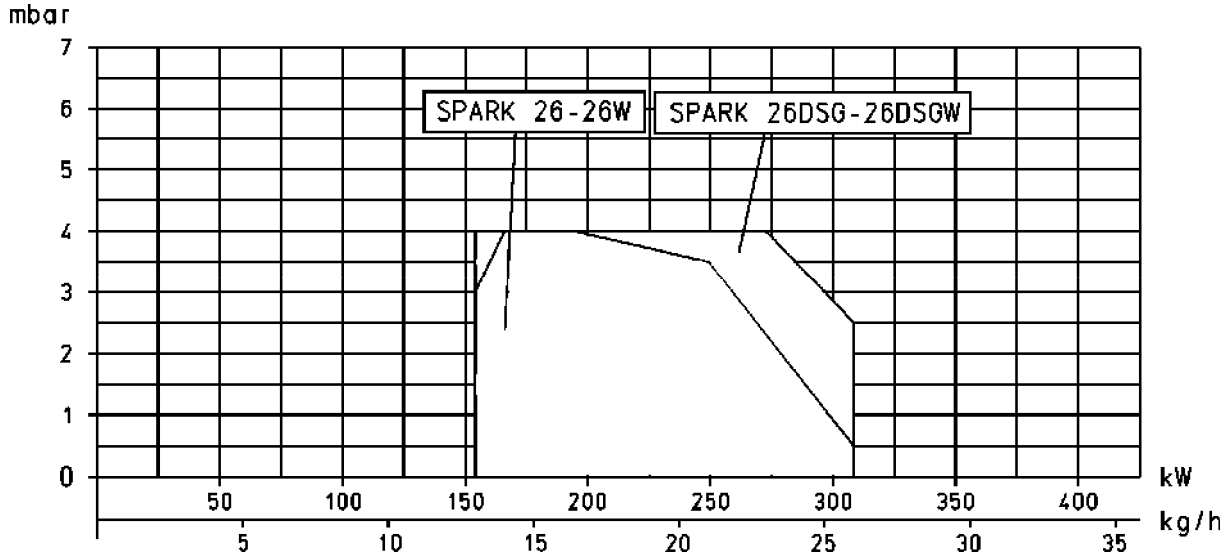

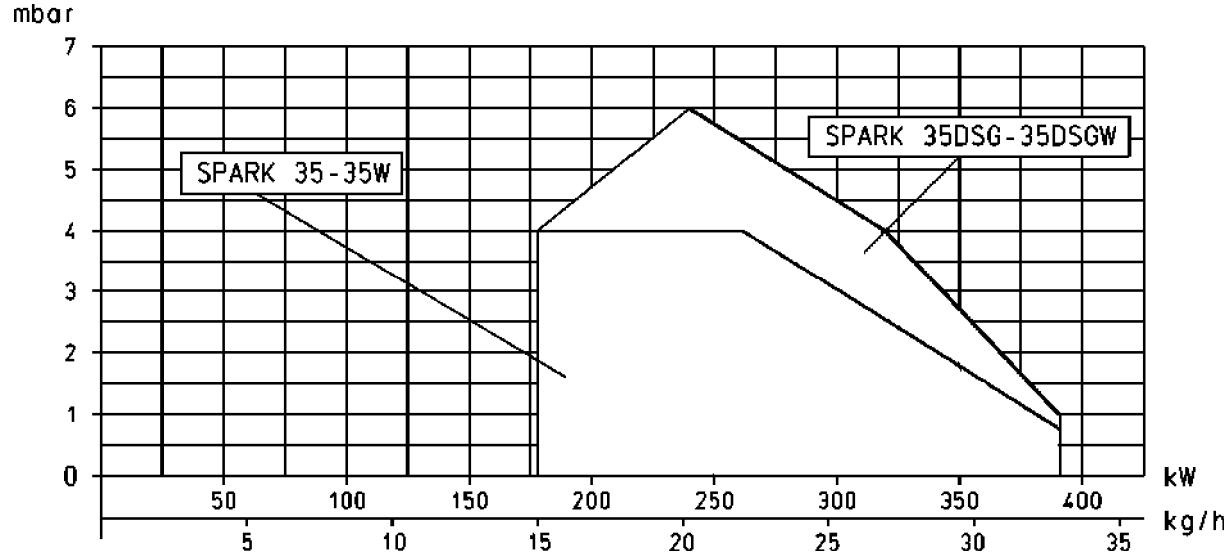

APPLICATION OF THE BURNER TO THE BOILER

The burner is fitted with a sliding attachment flange on the combustion head. All the components supplied must be mounted following the burner instructions.

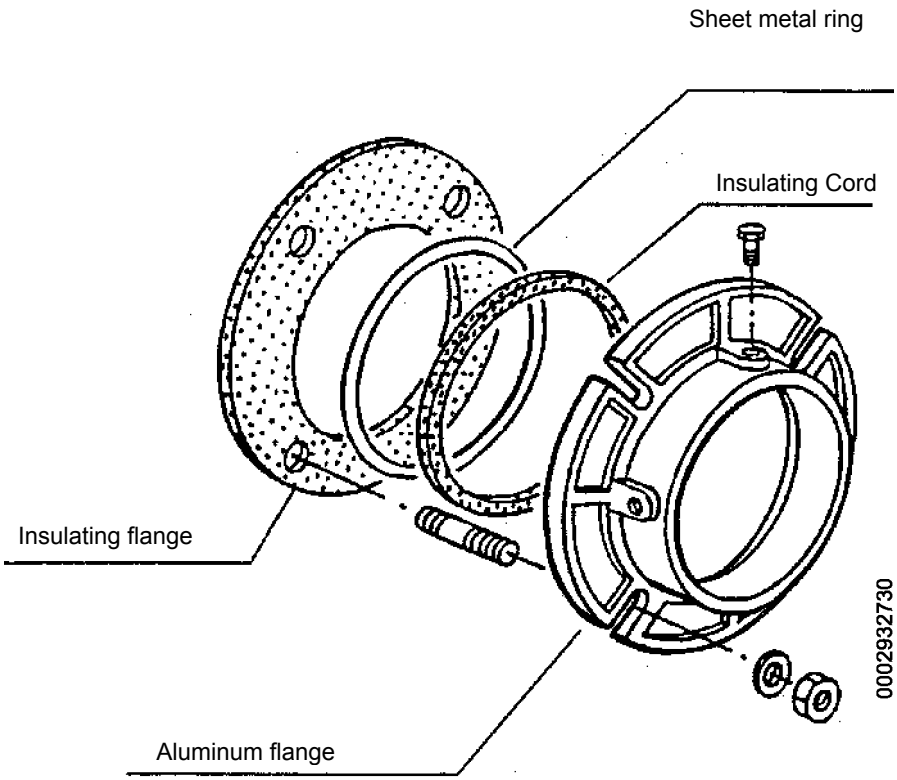

When the burner is being mounted on the boiler it is necessary to place this flange in the right position to have the combustion head enter the combustion chamber according to the boiler manufacturer's requirements. Light oil pipes must be connected to the burner after it has been properly mounted on the boiler.

HYDRAULIC CONNECTIONS

The pipes that connect the tank to the burner should be in perfect tight condition; we recommend the use of copper or steel pipes of an adequate diameter (see table and drawings). Fuel gate valves should be fitted at the end of the rigid pipelines. Fit the filter to the suction pipeline after the gate valve. Connect the flexible fitting to this, which in turn should be connected to the suction of the burner pump. Connect the flexible fitting to the return pipe after the gate valve, and then connect it to the burner pump return. Filter, flexible pipes and relative connection nipples are standard burner accessories. The pump is provided with special connection points for the insertion of control instruments (manometer and vacuum-meter). To ensure reliable and silent operating conditions, the vacuum in suction should not exceed 35 cm Hg equal to 0.46 bar. Maximum suction and return pressure 1.5 bar.

ELECTRIC CONNECTIONS

The electrical lines should be at an adequate distance from hot parts. It is advisable to make all the connections with flexible electric wire. Conductor's minimum section 1.5 mm2

PIPES FOR LIGHT OIL BURNER MODEL BT 120

GRAVITY SUPPLY SYSTEM

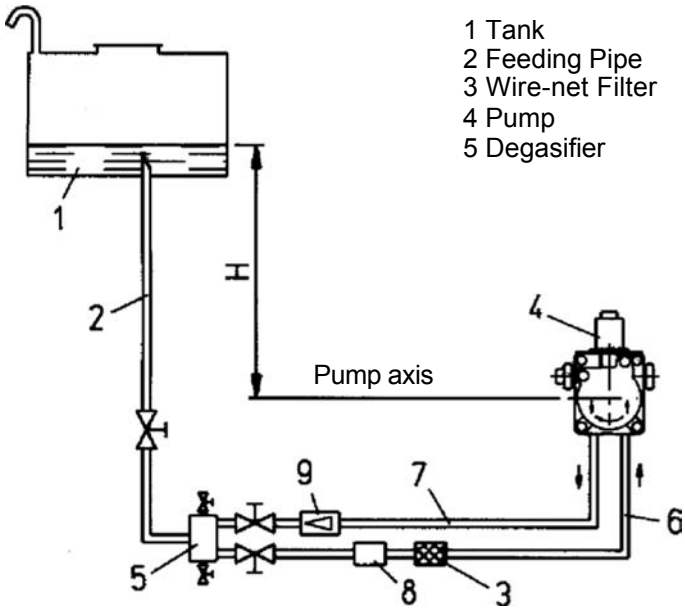

1 Tank
2 Feeding Pipe
3 Wire-net Filter
4 Pump
5 Degasifier

6 Suction Pipe
7 Return Pipe
8 Automatic Fuel Interception Device at Burner Shut-off
9 Non Return Valve

H meters	Total length meters
	ø i. 10 mm.
1	30
2	35
3	40
4	45

Max Pressure on Suction and Return = 1.5 bar

DROP - TYPE SYSTEM WITH SUPPLY FROM THE TANK TOP

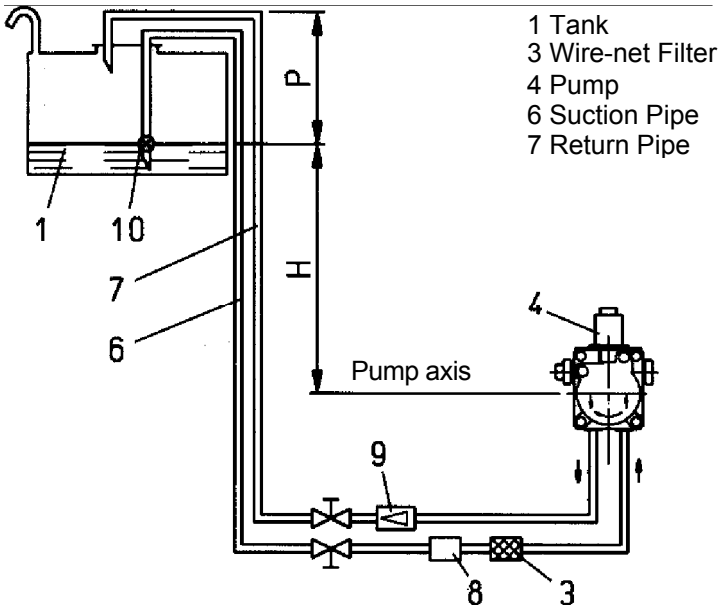

1 Tank
3 Wire-net Filter
4 Pump
6 Suction Pipe
7 Return Pipe

8 Automatic Fuel Interception Device at Burner Shut-off
9 Non Return Valve
10 Bottom Valve

H meters	Total length meters
	ø i. 10 mm.
1	30
2	35
3	40
4	45

P = 3.5 m. (max)

Max Pressure on Suction and Return = 1.5 bar

SUCTION - TYPE FEEDING SYSTEM

1 Tank
3 Wire-net Filter
4 Pump
6 Suction Pipe
7 Return Pipe
10 Bottom Valve

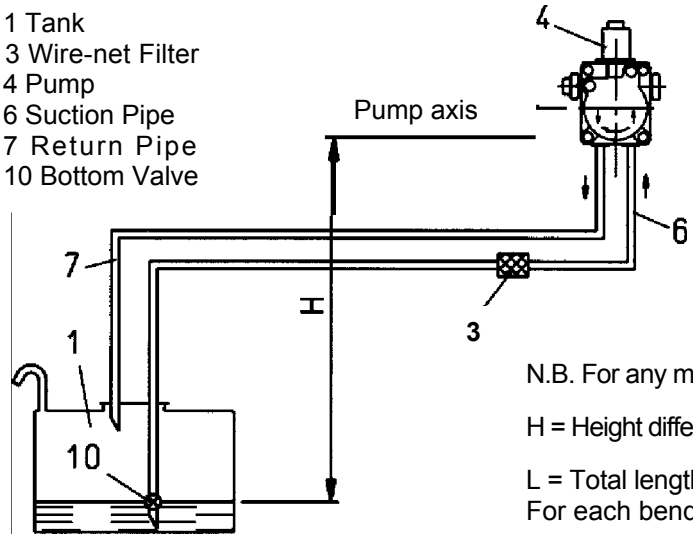

H meters	Total length meters	
	ø i. 10 mm.	ø i. 12 mm.
0.5	27	51
1	23	43
1.5	19	35
2	15	27
2.5	10	20
3	7	13
3.5	-	6

N.B. For any missing devices in the piping, follow existing regulations.

H = Height difference between minimum fuel tank level and pump axis.

L = Total length of pipeline including vertical length.
For each bend or valve deduct 0.25 m.

PIPES FOR LIGHT OIL BURNER MODEL BT 120

GRAVITY SUPPLY SYSTEM

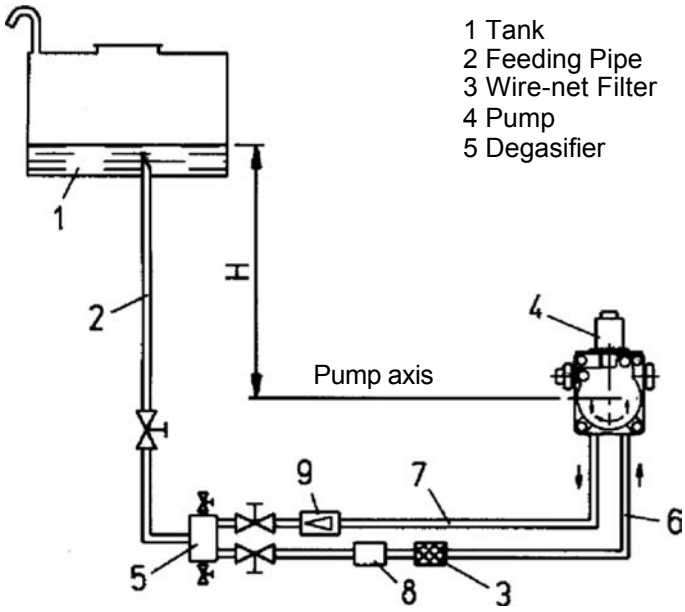

1 Tank
2 Feeding Pipe
3 Wire-net Filter
4 Pump
5 Degasifier

6 Suction Pipe
7 Return Pipe
8 Automatic Fuel Interception Device at Burner Shut-off
9 Non Return Valve

H meters	Total length meters
	ø i. 12 mm.
1	30
2	35
3	40
4	45

Max Pressure on Suction and Return = 1.5 bar

DROP - TYPE SYSTEM WITH SUPPLY FROM THE TANK TOP

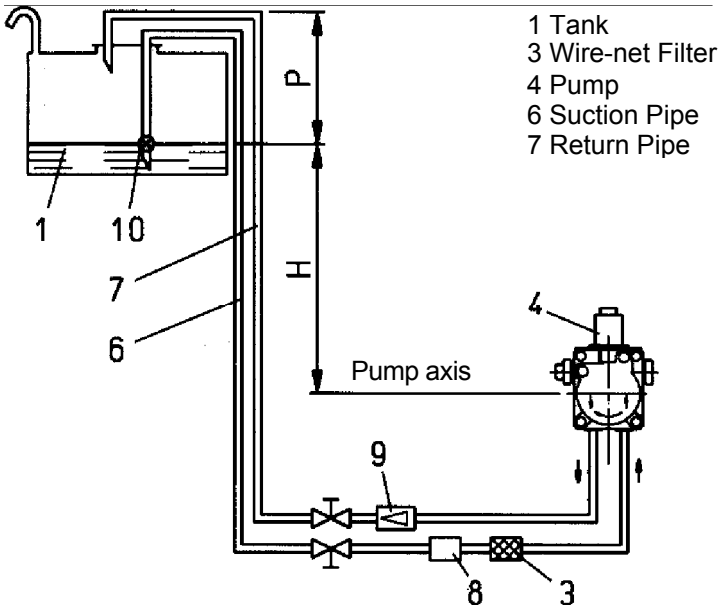

1 Tank
3 Wire-net Filter
4 Pump
6 Suction Pipe
7 Return Pipe

8 Automatic Fuel Interception Device at Burner Shut-off
9 Non Return Valve
10 Bottom Valve

H meters	Total length meters
	ø i. 12 mm.
1	30
2	35
3	40
4	45

P = 3.5 m. (max)

Max Pressure on Suction and Return = 1.5 bar

SUCTION - TYPE FEEDING SYSTEM

1 Tank
3 Wire-net Filter
4 Pump
6 Suction Pipe
7 Return Pipe
10 Bottom Valve

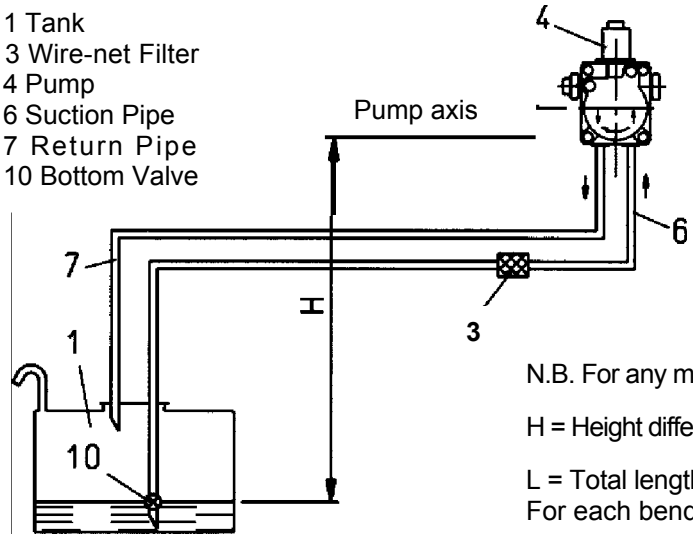

H meters	Total length meters	
	ø i. 12 mm.	ø i. 14 mm.
0.5	27	51
1	23	43
1.5	19	35
2	15	27
2.5	10	20
3	7	13
3.5	-	6

N.B. For any missing devices in the piping, follow existing regulations.

H = Height difference between minimum fuel tank level and pump axis.

L = Total length of pipeline including vertical length.
For each bend or valve deduct 0.25 m.

CONTROL BOX SPECIFICATIONS

Extraneous light / advanced ignition

During the pre-purging and/or pre-starting phase there shall be no flame signal. Should the signal be present, for example for advanced ignition due to bad tightness of the electrovalve, external lighting, short-circuit in the photocell or in the connecting cable, a breakdown in the flame signal amplifier, and so on., when the pre-purging and safety time has elapsed, the control-box brings the burner to the emergency stop and cuts off fuel inflow even during the safety time.

No flame

If there is no flame at the end of the safety time, the control-box stops the burner immediately.

No flame during operation

If there is no flame during operation, the control-box cuts off fuel and automatically repeats a new starting program: once the "t4" time has elapsed, the starting program is over. Every safety stop of less than 1 second switches off voltage to terminals 3 - 8 and 11: in the same, by means of terminal 10, it is possible to provide a remote signal of emergency stop. Resetting of the control-box is possible after approx. 50 seconds of emergency stop.

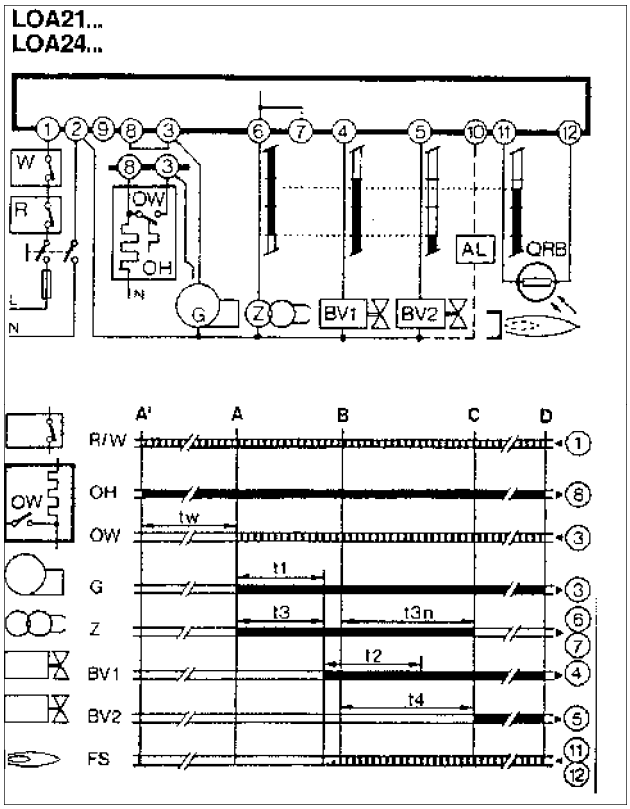

Program Legend

Control-box output signals

Input signals required

A' Beginning of starting cycle for burners with light-oil pre-heater "OH"

A Beginning of starting cycle for burner without light-oil pre-heater

B Flame presence

C Normal operation

D Adjustment stop by "R"

tw Light-oil pre-heating time until operation consent by contact "OW"

t1 Pre-purging time

t3 Pre-starting time

t2 Safety time

t3n Post-starting time

t4 Time interval between flame presence and connection of 2nd valve to terminal 5

Tension	Type	Safety at low voltage	Pre-purging	Pre-starting	Safety time	Post-starting	Time Interval
V ~	Without Base		t1	t3	t2max	t3n	BV1-BV2=t4
220/240	LOA 21.171 B27	-	13 s	13 s	10 s	15 s	15 s

Tension	Type	Safety at low voltage	Pre-purging	Pre-starting	Safety time	Post-starting	Time Interval
V ~	Without Base		t1	t3	t2max	t3n	BV1-BV2=t4
220/240	LOA 24.171 B27	-	13 s	13 s	10 s	15 s	15 s

CONTROL BOX SPECIFICATIONS

Extraneous light / advanced ignition

During the pre-purging and/or pre-starting phase there shall be no flame signal. Should the signal be present, for example for advanced ignition due to bad tightness of the electrovalve, external lighting, short-circuit in the photocell or in the connecting cable, a breakdown in the flame signal amplifier, and so on., when the pre-purging and safety time has elapsed, the control-box brings the burner to the emergency stop and cuts off fuel inflow even during the safety time.

No flame

If there is no flame at the end of the safety time, the control-box stops the burner immediately.

No flame during operation

If there is no flame during operation, the control-box cuts off fuel and automatically repeats a new starting program.

Every safety stop of less than 1 second switches off voltage to terminals 4 - 5 and 7: in the same, by means of terminal 10, it is possible to provide a remote signal of emergency stop. Resetting of the control-box is possible after approx. 3 seconds of emergency stop.

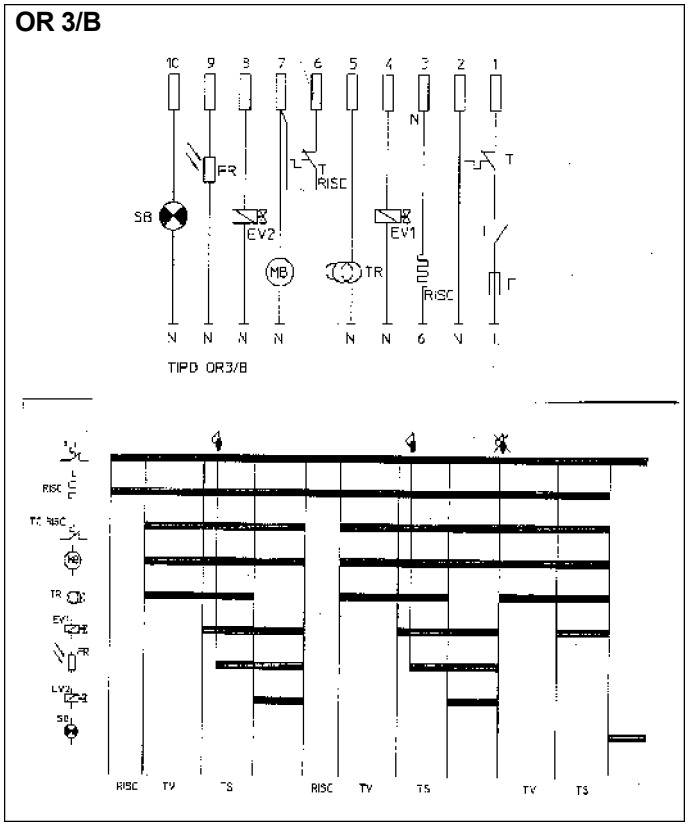

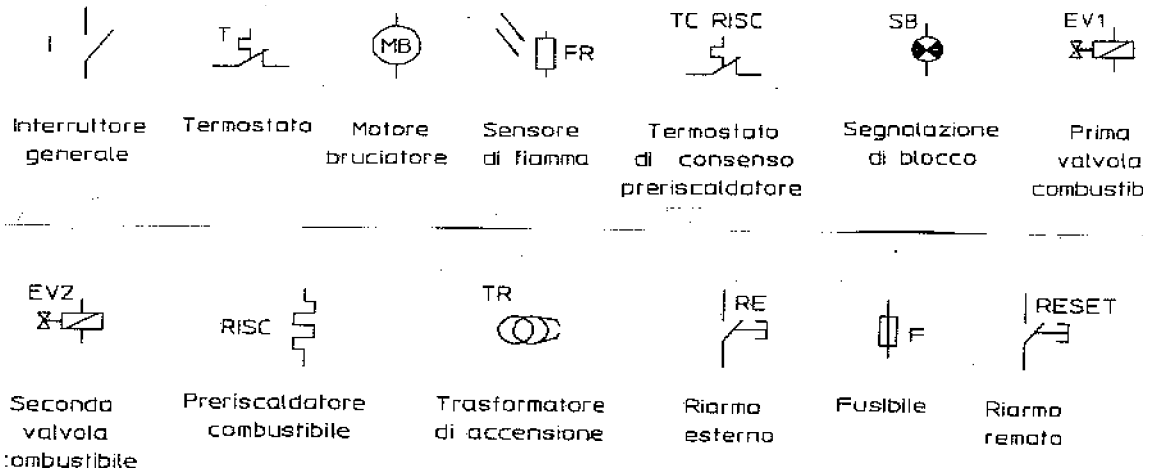

Equipment and relative programmer	Safety time in seconds	Pre-purging and pre-wash time in seconds	Post-ignition in seconds	Time between 1st and 2nd flame in seconds
OR 3 B	5	30	5	5

PREPARATIONS FOR START UP

Control that the nozzle (45° spray angle) applied is suitable for the boiler output. The table shows the delivery rates in Kg/h of light oil with respect to the nozzle size and the pump pressure (normally 12 bar). It should be remembered that 1 kg of light oil is equivalent to approximately 10.200 kcal). Make sure that the return pipe in the tank has no obstructions, e.g. gate valves, closed plugs etc. Any eventual obstruction would cause a breakage in the sealing surface situated on the pump shaft. Close the main switch and the boiler thermostats in order to start up the motor and the ignition transformer and, after approximately 10 seconds, the electric valve will cut in and expose the photocell to a source of light until the burner stops (shut down). When the pipelines have been filled up (and when fuel has come out of the nozzle), stop the burner and put the photocell back in its seat.

NOTE: Should it be necessary to purge air, this can be done by loosening the special fitting which the pump is provided with. Do not illuminate the photocell before the electric valve has cut in because, in this case, the control box will go to “lock-out”.

START UP AND REGULATION

Loosen the “A” clamp screw and put the air shutter regulator in the position considered necessary in function with the quantity of fuel to be burned. Close the main switch in order to start up the burner. Correct, if necessary, the combustion air delivery by adjusting the suction regulation.

The burner is equipped with screws which regulate the flame disk position and this device permits a perfection of the combustion by reducing or increasing the air passage between the disk and the head. It is necessary to reduce (turn in an anti clockwise direction the relative screw) the air passage between the disk and the head when operating with a reduced fuel delivery. This passage must be proportionately opened more (turn relative screw in a clockwise direction) when the burner is working with a higher fuel delivery.

After having modified the flame disk position, it is necessary to correct the air shutter regulator positions and to verify that ignition occurs correctly.
The burner is provided with the pump set at 12 bar, to adjust this value rotate the relative screw.

USE OFTHE BURNER

The burner operates fully automatically, therefore it is not necessary to carry out any kind at adjustment during its operating. The “lock-out” position is a safety position reached by the burner automatically when some of the components of the burners or the plant do not work properly. It is necessary to check then whether the cause to the problem is a dangerous one before re-setting the burner. The causes of the lock-out may be temporary, for example when air in inside the pipes. When it is reset, the burner starts operating normally.

If the burner stops three or four times in succession, it is necessary either to lock for the problem and solve it or ask for the intervention of the after sales service. The burner can remain in the “lock-out” position without any limit in time. In emergency cases it is advisable to close the fuel valve, and disconnect the burner electrically.

MAINTENANCE

At the end of the heating season, it is usually advisable to clean the filter, blast tube (disc, insulators, electrodes, nozzles, etc), combustion air passages and photocell. To clean nozzle passages, use soft material (e.g. wood, plastic). Replacement of nozzles every 12 months of operation is recommended.

SAFETY CHECKS

Checks the following:

1) Burner stoppage by opening the thermostats;
2) “Blocking” by shading the photocell.

To reset the burner push the appropriate button.

SUNTEC AS 47 A 7432-3

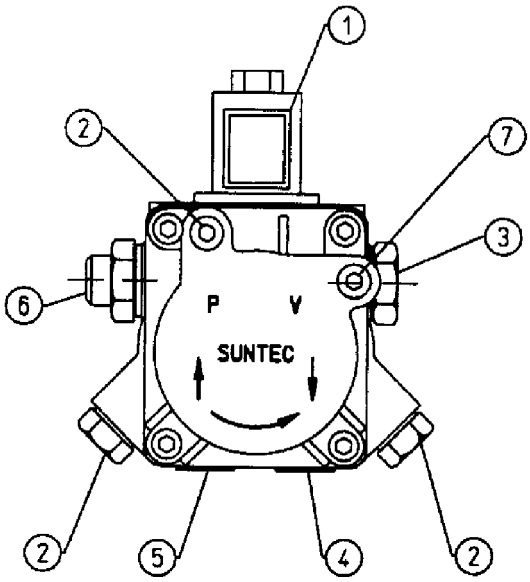

SUNTEC AS 67 A 746

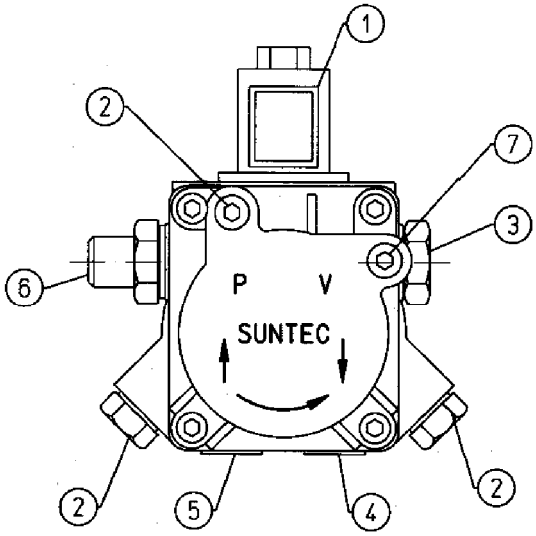

1. Electrovalve (normally closed)
2. Pressure Test Point and Purge Point (1/8”)
3. Pressure Regulation Screw (12 bar)
4. Return
5. Suction
6. Delivery
7. Vacuum Test Point (1/8”)

AIR REGULATION PRINCIPLE DIAGRAM
DISC/ELECTRODE SETTINGS

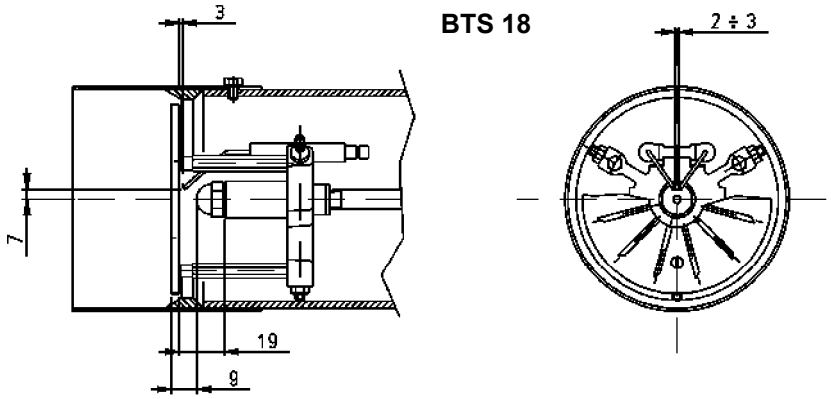

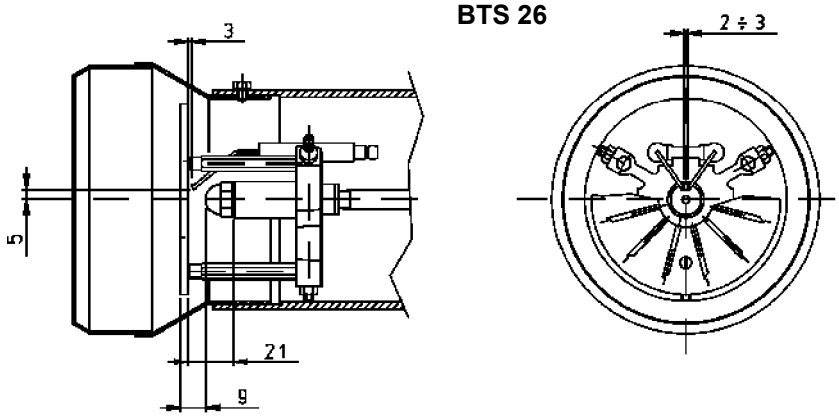

A - Air gate fixing screw

B - **Head disk adjustment screw (tighten to open the head-disk air passage, loosen to shut)**

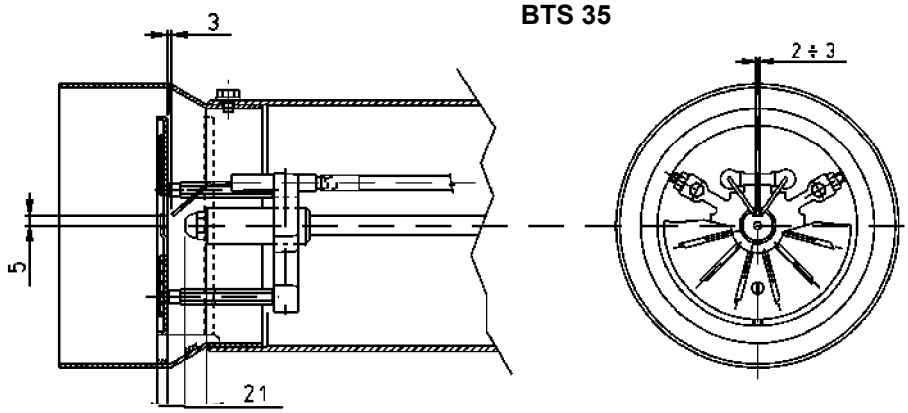

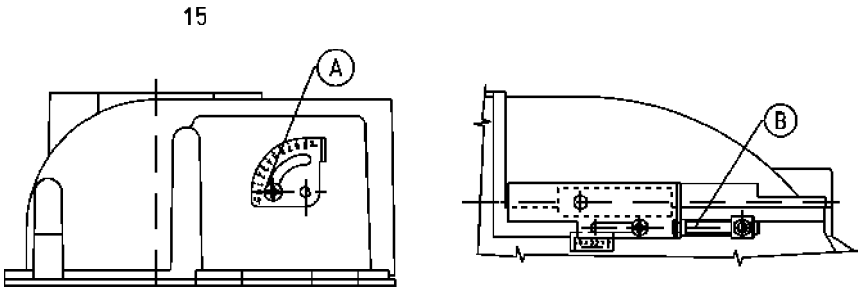

-ADJUSTMENT DIAGRAM FOR SERVOMOTOR BERGER STA 5 BO.3618 2/N 36R PRE-PURGING WITH AIR OPEN IN 1ST FLAME POSITION.

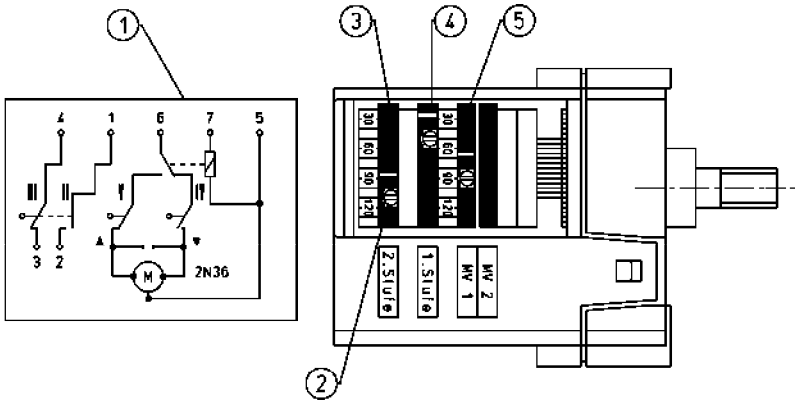

1. Electric Diagram
2. Adjusting Screw
3. 2nd Flame Air Adjusting Cam
4. 1st Flame Air Adjusting Cam
5. 2nd Flame Valve Actuating Cam
   (it must be adjusted between the 1st and 2nd flame cam)
6. electrical Connections
7. Reference Index

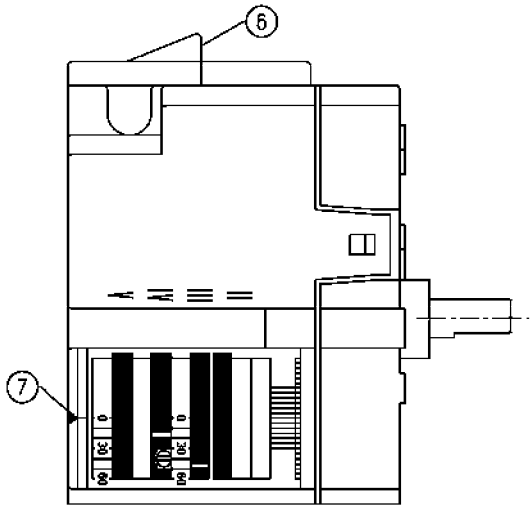

TO MODIFY THE ADJUSTMENT OF THE CAMS USE THEIR SCREWS. THE MARK OF THE RED RING INDICATES THE ROTATION ANGLE ON THE REFERENCE SCALE SET FOR EACH CAM.

DETAILS of PROBLEM	POSSIBLE CAUSE	SOLUTION
The burner goes to “lock-out” with the flame on (red light on). Fault restricted to flame control device.	1) Flame disc dirty or worn. 2) Photocell dirty or greasy. 3) Equipment fault. 4) Photo resistor circuit failure.	1) Clean or replace it. 2) Clean or replace it. 3) Check all smoke circuits inside the boiler and the chimney. 4) Replace the control box.
The burner goes to “lock-out”, oil flows out but there is no flame (red light on). Fault restricted to ignition circuit.	1) Fault in ignition circuit. 2) Ignition transformer cable discharges to earth. 3) Ignition transformer cable disconnected. 4) Ignition transformer faulty. 5) The distance between electrode and earth is incorrect. 6) Isolator dirty therefore the electrode discharges to earth.	1) Check the circuit completely. 2) Replace. 3) Connect. 4) Replace. 5) Position at the correct distance 6) Clean or replace isolator and electrode.
The burner goes to “lock-out”, oil does not flow (red light on).	1) One phase missing. 2) Insufficient electric motor. 3) Light oil does not reach the pump. 4) No light oil inside the tank. 5) Closed gate valve in suction pipe. 6) Clogged nozzle. 7) Motor rotating in the opposite direction as that indicated by the arrow.	1) Check the feeder line. 2) Repair or replace it. 3) Check the suction pipe. 4) Fill with fuel 5) Open it. 6) Replace nozzle. 7) Invert a phase in the input switch.
The burner does not start.	1) Open contact in thermostats or pressure switches. 2) Photocell short circuits. 3) There is no voltage because of an open contact in the main switch, the meter overload release or no voltage in line. 4) The thermostats line was not carried out according to the diagram or thermostats did not close the contacts. 5) Failure inside the control box.	1) Increase the value or wait for them to close by natural decrease in temperature or pressure. 2) Replace. 3) Close the contact of the switches or wait for voltage to be supplied again. 4) Check thermostats connections. 5) Replace.
Defective flame with sparks.	1) Spraying pressure is too low. 2) Too much combustion air. 3) Nozzle dirty or worn out. 4) Water in fuel.	1) Bring it to the expected value. 2) Decrease combustion air. 3) Replace. 4) Purge it from the tank by using a suitable pump (never use the burner pump to carry out this operation).
Badly shaped flame with smoke and soot.	1) Insufficient combustion air. 2) Nozzle dirty or worn out. 3) Clogged boiler pipe or chimney. 4) Low spraying pressure.	1) Increase combustion air. 2) Replace. 3) Clean them. 4) Bring to the correct value.

ELECTRIC DIAGRAM
BTS 18 - 26

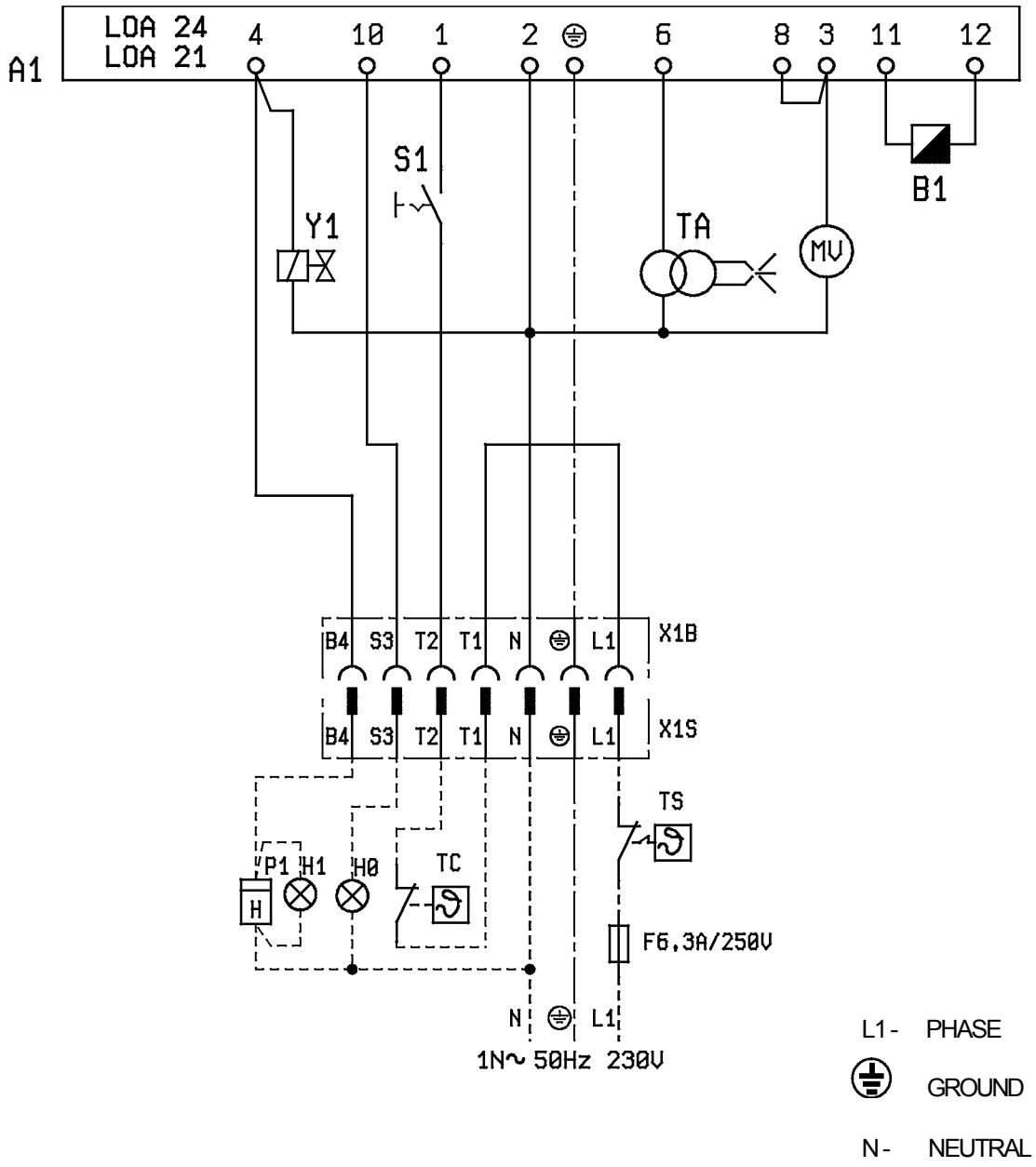

S1	- On/Off Switch
H0	- Block Lamp
H1	- Operation Light
B1	- Photocell
TA	- Ignition Transformer
TS	- Safety Thermostat
TC	- Boiler Thermostat
A1	- Control Box
Y1	- 1 Stage Electrovalve
MV	- Fan Motor
P1	- Hour Meter

ELECTRIC DIAGRAM
BTS 18 – 26 – 35

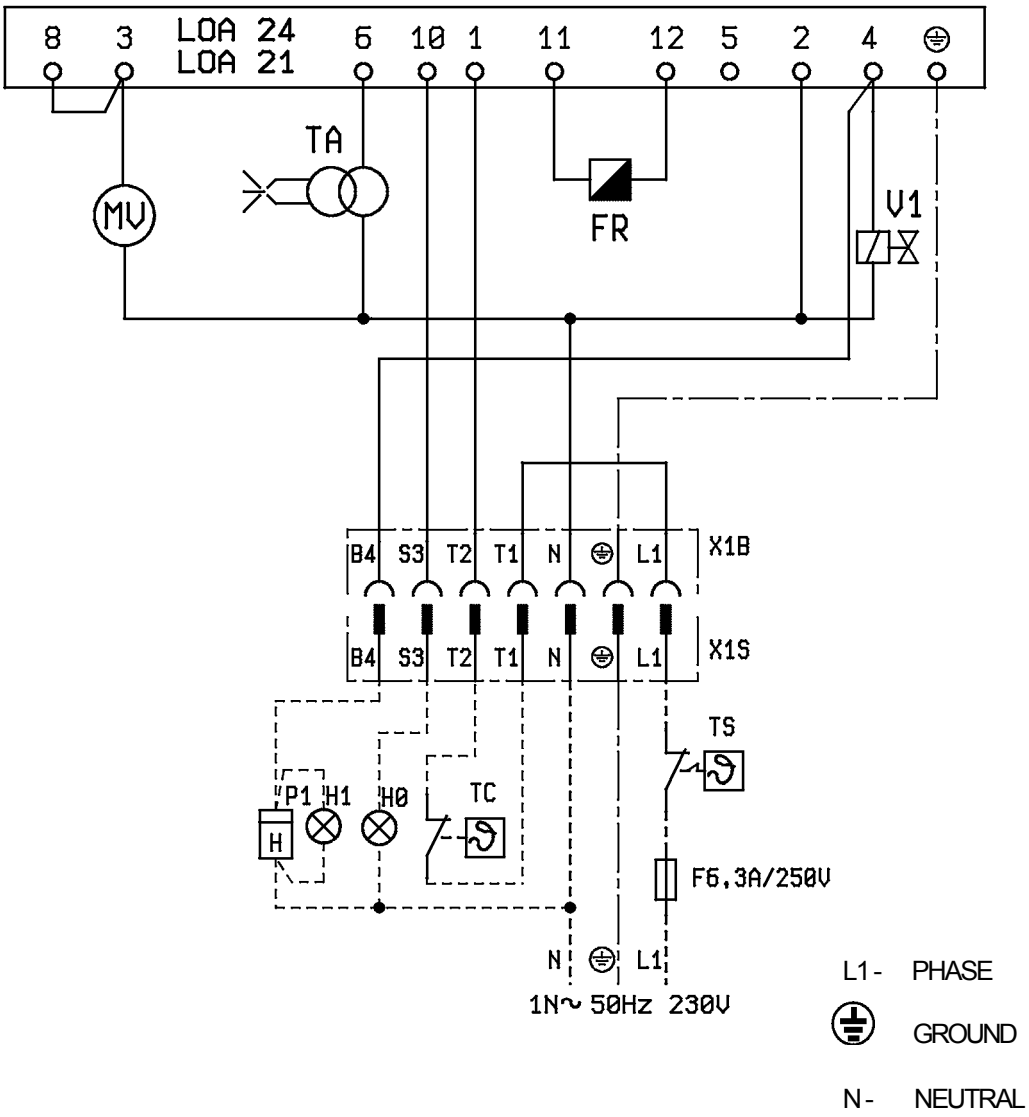

H0 - Block Lamp
H1 - Operation Light
FR - Photocell
TA - Ignition Transformer
TS - Safety Thermostat
TC - Boiler Thermostat
LOA21 - Control Box
LOA24 - Control Box
V1 - Electrovalve
MV - Fan Motor
P1 - Hour Meter

NOZZLE FLOW-RATE TABLE FOR LIGHT OIL

Nozzle	Pump Pressure bar															Nozzle
	7	8	9	10	11	12	13	14	15	16	17	18	19	20	21	
G.P.H.	Nozzle output flow-rate kg/h															**G.P.H.**
0.40	**1.27**	**1.36**	**1.44**	**1.52**	**1.59**	**1.67**	**1.73**	**1.80**	**1.86**	**1.92**	**1.98**	**2.04**	**2.10**	**2.15**	**2.20**	**0.40**
0.50	1.59	1.70	1.80	1.90	1.99	2.08	2.17	2.25	2.33	2.40	2.48	2.55	2.62	2.69	2.75	0.50
0.60	**1.91**	**2.04**	**2.16**	**2.28**	**2.39**	**2.50**	**2.60**	**2.70**	**2.79**	**2.88**	**2.97**	**3.06**	**3.14**	**3.22**	**3.30**	**0.60**
0.65	2.07	2.21	2.34	2.47	2.59	2.71	2.82	2.92	3.03	3.12	3.22	3.31	3.41	3.49	3.58	0.65
0.75	**2.38**	**2.55**	**2.70**	**2.85**	**2.99**	**3.12**	**3.25**	**3.37**	**3.49**	**3.61**	**3.72**	**3.82**	**3.93**	**4.03**	**4.13**	**0.75**
0.85	2.70	2.89	3.06	3.23	3.39	3.54	3.68	3.82	3.96	4.09	4.21	4.33	4.45	4.57	4.68	0.85
1.00	**3.18**	**3.40**	**3.61**	**3.80**	**3.99**	**4.16**	**4.33**	**4.50**	**4.65**	**4.81**	**4.96**	**5.10**	**5.24**	**5.37**	**5.51**	**1.00**
1.10	3.50	3.74	3.97	4.18	4.38	4.58	4.77	4.95	5.12	5.29	5.45	5.61	5.76	5.91	6.06	1.10
1.20	**3.82**	**4.08**	**4.33**	**4.56**	**4.78**	**5.00**	**5.20**	**5.40**	**5.59**	**5.77**	**5.95**	**6.12**	**6.29**	**6.45**	**6.61**	**1.20**
1.25	3.97	4.25	4.50	4.75	5.00	5.20	5.40	5.60	5.80	6.00	6.20	6.35	6.55	6.70	6.85	1.25
1.35	**4.29**	**4.59**	**4.87**	**5.13**	**5.38**	**5.62**	**5.85**	**6.07**	**6.28**	**6.49**	**6.69**	**6.88**	**7.07**	**7.26**	**7.44**	**1.35**
1.50	4.77	5.10	5.41	5.70	5.90	6.24	6.50	6.75	6.98	7.21	7.43	7.65	7.86	8.06	8.26	1.50
1.65	**5.25**	**5.61**	**5.95**	**6.27**	**6.58**	**687**	**7.15**	**7.42**	**7.68**	**7.93**	**8.18**	**8.41**	**8.64**	**8.87**	**9.09**	**1.65**
1.75	5.56	5.95	6.31	6.65	6.98	7.29	7.58	7.87	8.15	8.41	8.67	8.92	9.17	9.41	9.64	1.75
2.00	**6.30**	**6.80**	**7.21**	**7.60**	**7.97**	**8.33**	**8.67**	**8.99**	**9.31**	**9.61**	**9.91**	**10.20**	**10.48**	**10.75**	**11.01**	**2.00**
2.25	7.15	7.65	8.15	8.55	8.97	9.37	9.75	10.12	10.47	10.85	11.15	11.47	11.79	12.09	12.39	2.25
2.50	**7.95**	**8.50**	**9.01**	**9.50**	**9.97**	**10.41**	**10.83**	**11.24**	**11.64**	**12.02**	**12.39**	**12.75**	**13.10**	**13.44**	**13.77**	**2.50**
3.00	9.54	10.20	10.82	11.40	11.96	12.49	13.00	13.49	13.96	14.02	14.87	15.30	15.72	16.12	16.52	3.00
3.50	**11.13**	**11.90**	**12.62**	**13.30**	**13.95**	**14.57**	**15.17**	**15.74**	**16.29**	**16.83**	**17.34**	**17.85**	**18.34**	**18.81**	**19.28**	**3.50**
4.00	12.72	13.60	14.42	15.20	15.94	16.65	17.33	17.99	18.62	19.23	19.82	20.40	20.95	21.50	22.03	4.00
4.50	**14.31**	**15.30**	**16.22**	**17.10**	**17.94**	**18.73**	**19.50**	**20.24**	**20.95**	**21.63**	**22.30**	**22.95**	**23.57**	**24.19**	**24.78**	**4.50**
5.00	15.90	17.00	18.03	19.00	19.93	20.82	21.67	22.48	23.27	24.04	24.78	25.49	26.19	26.87	27.54	5.00
5.50	**17.49**	**18.70**	**19.83**	**20.90**	**21.92**	**22.90**	**23.83**	**24.73**	**25.60**	**26.44**	**27.25**	**28.04**	**28.81**	**29.56**	**30.29**	**5.50**
6.00	19.00	20.40	21.63	22.80	23.92	24.98	26.00	26.98	27.93	28.84	29.73	30.59	31.43	32.25	33.04	6.00
6.50	**20.67**	**22.10**	**23.44**	**23.70**	**25.91**	**27.06**	**28.17**	**29.23**	**30.26**	**31.25**	**32.21**	**33.14**	**34.05**	**34.94**	**35.80**	**6.50**
7.00	22.26	23.79	25.24	26.60	27.90	29.14	30.33	31.48	32.58	33.65	34.69	35.69	36.67	37.62	38.55	700
7.50	**23.85**	**25.49**	**27.04**	**28.50**	**29.90**	**31.22**	**32.50**	**33.73**	**34.91**	**36.05**	**37.16**	**38.24**	**39.29**	**40.31**	**41.31**	**7.50**
8.30	26.39	28.21	29.93	31.54	33.08	34.55	35.97	37.32	38.63	39.90	41.13	42.32	43.48	44.61	45.71	8.30
9.50	**30.21**	**32.29**	**34.25**	**36.10**	**37.87**	**39.55**	**41.17**	**42.72**	**44.22**	**45.67**	**47.07**	**48.44**	**49.77**	**51.06**	**52.32**	**9.50**
10.50	33.39	35.69	37.86	40.06	41.73	43.74	45.41	47.20	48.90	50.50	52.00	53.50	55.00	56.40	57.80	10.50
12.00	**38.20**	**40.80**	**43.30**	**45.60**	**47.80**	**50.00**	**52.00**	**54.00**	**55.90**	**57.70**	**59.50**	**61.20**	**62.90**	**64.50**	**66.10**	**12.00**
13.80	43.90	46.90	49.80	52.40	55.00	57.50	59.80	62.10	64.20	66.30	68.40	70.40	72.30	74.30	76.00	13.80
15.30	**48.60**	**52.00**	**55.20**	**58.10**	**61.00**	**63.70**	**66.30**	**68.80**	**71.10**	**73.60**	**75.80**	**78.00**	**80.20**	**82.20**	**84.30**	**15.30**
17.50	55.60	59.50	63.10	66.50	69.80	72.90	75.80	78.70	81.50	84.10	86.70	89.20	91.70	94.10	96,40	17.50
19.50	**62.00**	**66.30**	**70.30**	**74.10**	**77.70**	**81.20**	**84.50**	**87.70**	**90.80**	**93.70**	**96.60**	**99.40**	**102.20**	**104.80**	**107.40**	**19.50**
21.50	68.40	73.10	77.50	81.70	85.70	89.50	93.20	96.70	100.10	103.40	106.50	109.60	112.60	115.60	118.40	21.50
24.00	**76.30**	**81.60**	**86.50**	**91.20**	**95.70**	**99.90**	**104.00**	**107.90**	**111.70**	**115.40**	**118.90**	**122.40**	**125.70**	**129.00**	**132.20**	**24.00**
28.00	89.00	95.20	101.00	106.40	111.60	116.60	121.30	125.90	130.30	134.60	138.70	142.80	146.70	150.50	154.20	28.00
30.00	**95.40**	**102.00**	**108.20**	**114.00**	**119.60**	**124.90**	**130.00**	**134.90**	**139.60**	**144.20**	**148.70**	**153.00**	**157.20**	**161.20**	**165.20**	**30.00**

1 mbar= 10 mmC.A. ≅ 100 Pa 1
kW= 860 kcal

Light Oil Density	= 0,820 / 0,830	PCI = 10150
Special Heating Oil Density	= 0,900	PCI = 9920
Domestic (3,5°E) Heating Oil Density	= 0,940	PCI = 9700
Heavy Oil Density (7,9°E)	= 0,970 / 0,980	PCI = 9650

PCI = Minimum Calorific Value

EOGB Energy Products Ltd
5 Howard Road,
Eaton Socon,
St. Neots,
Cambs.
PE19 8ET

Telephone: 08703 899499
Facsimile: 01480 477022
Website: www.eogb.co.uk

CDIRGI 197506 OFTEC Member ICOM Energy Association